City of Falcon Heights
Planning Commission

City Hall
2077 Larpenteur Avenue West

AGENDA

Tuesday, March 24, 2026
7:00 p.m.

A. CALL TO ORDER: 7:00 p.m.

B. ROLL CALL:

Jacob Brooks (Chair) ____
Jake Anderson (Vice-Chair) ____
Rick Seifert (Secretary) ____
Laura Paynter ____
Mike Tracy ____
Jeremy Hallowanger ____
Mark Miazga ____

Staff Liaison – Hannah B. Myhren ____
Council Liaison – Jim Mogen ____

C. APPROVAL OF AGENDA

D. APPROVAL OF MINUTES
1. February 24, 2026

E. PUBLIC HEARING
1. PUD Amendment – Fairway Commons

F. NEW BUSINESS
1. PUD Amendment – Fairway Commons
2. 1407 Larpenteur Acquisition – Compliance with the 2040 Comprehensive Plan

G. INFORMATION AND ANNOUNCEMENTS
1. Staff Liaison Report
2. Council Liaison Report

H. ADJOURN

Next regular meeting date: April 28, 2026

CITY OF FALCON HEIGHTS
Planning Commission
City Hall
2077 West Larpenteur Avenue

MINUTES

February 24, 2026 at 7:00 P.M.

A. CALL TO ORDER: 7:00 P.M.

B. ROLL CALL:

Jacob Brooks (Chair) _X_
Jake Anderson (Vice-Chair) _X_
Rick Seifert (Secretary) _X_
Mike Tracy _X_
Laura Paynter _X_
Jeremy Hallowanger _X_
Mark Miazga _X_

Staff Liaison Lynch _X_
Council Liaison Mogen _X_

C. APPROVAL OF AGENDA
A motion was made by Commissioner Paynter to approve the agenda. Agenda was approved by consent.

D. APPROVAL OF MINUTES
1. January 27, 2026

Commissioner Paynter pointed out an error in the role call from the January 27, 2026 minutes. Council Liaison Mogen was listed as a commissioner. Commissioner Anderson made a motion to approve the minutes from the January 27, 2026 meeting with correction. All were in favor. Minutes were approved with correction by consent.

E. PUBLIC HEARING – *None.*

F. NEW BUSINESS
1. Les Bolstad golf Course Redevelopment – Community Advisory Committee (CAC)
Council Liaison Mogen provided an overview of the Community Advisory Committee. The University of Minnesota is continuing on with their selection of a developer for the Les Bolstad Golf Course. The City's consultant, Bolton & Menk, has put together a 24-26 month plan to follow, starting in approximately March. The first steps are to establish a Community Advisory Committee (CAC) and a Technical Advisory Committee (TAC). The TAC is a group of expert staff, including the City engineer, traffic experts, sewer experts, representatives from the St. Paul Regional Water Services, and others. The CAC will be made up of representatives from the community to talk about planning and to ultimately come up with a master zoning plan. The TAC will be put together by Staff.

DRAFT

City Council is discussing at their February 25, 2026 meeting the proposed 9-member CAC. It is being proposed to have six members from Falcon Heights, including one from the University Grove neighborhood, one member at large from the City, and one from each City commission (Planning, Environment, Parks and Recreation, and Community Engagement). There will also be one St. Paul member appointed by District 12, one Lauderdale member appointed by Lauderdale's City Council, and one Roseville member appointed by Roseville's City Council. The CAC will likely be meeting on the third Wednesday of the month. Commissioners were advised to fill out an application if they are interested.

G. INFORMATION AND ANNOUNCEMENTS

1. Staff Liaison Report – *Staff Liaison Lynch reminded Commissioners that the March meeting will be a PUD amendment for the property adjacent to Amber Union, and to please be in attendance. She also advised Commissioners that the City's second Sustainability Fair will be held on April 18 from 11 AM – 2 PM at City Hall.*
2. Council Liaison Report – *Council Liaison Mogen stated the last few meetings of City Council have been dealing with ICE-related activities. Council has adopted a couple of new policies to address this. Council is also working on a legislative agenda.*

H. ADJOURN

A motion was made by Commissioner Paynter to adjourn the meeting. Meeting was adjourned by consent at 7:23 PM.

DRAFT

Meeting Date	March 24, 2026
Agenda Item	Public Hearing E-1, F-1
Attachment	See below.
Submitted By	Hannah B. Myhren, Community Development Coordinator

Item	PUD Amendment – Section 113-212
Description	In 2023, a Planned Unit Development was approved for a 100-unit affordable housing apartment building to be named Amber Flats, located in the parking lot just west of the existing Amber Union Apartments. In 2025, Velair Development Company ("VDC") approached the City with interest to purchase the property and needing information on the process to amend the Planned Unit Development. When Amber Flats was approved, there were three main deviations from City Code: • The height of the proposed building was over the maximum allowed in the City (40' or 4 stories, whichever is less) at 49' in height. • The impervious surface coverage was over the maximum allowed in the City (75% of the lot) at around 76%. • The amount of parking that would have been required for the building (At the time, 2 spaces per unit; this has since been changed to 1 space per unit) was too low at 1.14 spaces per unit. **<u>THE PROPOSAL</u>** Velair Development Company is an affordable housing developer that is currently under contract to buy the two lots previously approved for Amber Flats PUD from Buhl Larpenteur West LLC. Fairway Commons is the proposed name for the apartment building and it will be situated in the existing overflow parking lot next to Amber Union. It will be a 110-unit senior (55+) affordable apartment building at 1644 Larpenteur Avenue West. It will consist of a mix of studio, one-, and two-bedroom floorplans across four stories of residential and one underground level of parking. The gross square footage of the building is estimated at 126,329 square feet, which includes the underground parking area.

CURRENT STATUS OF PROPERTY & CITY CODE REQUIREMENTS / EXISTING PUD REQUIREMENTS

Below are excerpts from City Code with the standard requirements for new developments in the zoning district this property is currently located in. Bolded next to each item is how the proposal does or does not currently meet those requirements and any additional staff notes.

This property is currently zoned Amber Flats Planned Unit Development with an underlying zoning of R5M, High Density Residential Mixed Use.

Sec. 118-182 (b) Purpose and intent. The purpose of the mixed use high density residential district is to provide high density, primarily apartment style, rental and condominium housing with limited commercial uses within the same structure. The intent of the district is to meet or exceed the city's comprehensive plan density goal of 28 residential units per acre. **Proposal meets this intent.**

Sec. 118-182 (c) Permitted uses.

(1) *Apartment buildings with a maximum of 40 dwelling units per acre.* **Proposal meets this requirement @ just under 40 dwelling units per acre.**

Sec. 118-182 (g) Lot area, height, lot width, and yard requirements.

(1) *The following minimum requirements shall be observed subject to additional requirements except as modified in this section and in section 113-241:*

Lot Area	*Lot Width*	*Front Yard*	*Side Yard*	*Rear Yard*
2.5 acres **N/A**	*200 feet* **N/A**	*30 feet* **Proposal meets this requirement @ 43.1'.**	*10 feet or ½ the height of the building, whichever is greater* **Proposal meets this requirement @ 24.5'.**	*30 feet* **Proposal meets this requirement @ 64.7'.**

(2) *The required setback from a lot line abutting property zoned R-1 is 50 feet.* **Proposal meets this requirement @ 153.5'.**

(4) *Except as provided in section 113-243, the maximum height is four stories or 40 feet, whichever is less.* **Proposal does not meet this requirement at 45' 6", and may increase to around 49' 6" if the ceiling heights are changed to 9' ceilings. For reference, Falcon Heights Town Square is around 49' in height at its tallest point, and the existing Amber Union building is over 52' in height at its tallest point. This building would be stepping down from that, or roughly the same height as Town Square with 9' ceilings throughout.**

Sec. 113-241 – Required yards and open spaces
(b) Permitted encroachments on required yards. The following shall be permitted encroachments into setback and height requirements except as restricted by other sections of this chapter:
(4) In no event shall off-street parking, structures of any type, buildings, or any impervious surfaces cover more than 75 percent of the lot area. **The existing lot is a total of 2.6 acres. Existing impervious surface on lot is 1.9 acres which is around 73.3% impervious. The proposed impervious surface is 1.6 acres which is around 62.7% impervious. Proposal meets this requirement.**

DIVISION 2. – OFF-STREET PARKING AND LOADING
Sec. 113-310 – Residential districts

(3) *The following provisions apply to the R-5M district: The requirements of the R-4 district shall apply except that at least 80 percent of the required parking spaces for apartment buildings shall be below grade and integrated into the apartment building.*

(2) *The following provisions shall apply to the R-3 and R-4 districts:*
(e) Off-street parking spaces required (one space equals 350 square feet) shall be as follows for:
Multiple-family dwellings. At least one parking spaces per dwelling unit. **By code, this property would require 110 parking spaces, with 80% of those being below grade (88 spaces). As proposed, there are to be 44 surface parking spaces and 72 sublevel parking spaces for a total of 116 parking spaces. This equals to 1.05 parking stalls per unit. Proposal meets this requirement for total parking stalls, not for the subsurface .**

<u>THE PUD / CITY CODE AMENDMENT PROCESS</u>

Notice Required
Planned unit developments may be permitted in the legislative discretion of the city council. The application and hearing process for a planned unit development is the same as is required for other zoning chapter amendments. The standard notice requirement for amendments to a section of the Zoning Chapter of City Code is mailing a notice to all property owners within 350′ of the property. As a best practice however, the City mails to all property owners and residents within 500′. The notice was also posted at City Hall on March 10, 2026 and published in the Pioneer Press on March 12, 2026 and March 13, 2026.

Comprehensive Plan Consistency
A PUD must be consistent with the city comprehensive plan and the intent and purpose of the City Code provisions relative to land use, subdivision and development.

Several relevant goals have been provided below for reference, however a full copy of the 2040 Comprehensive Plan can be found online:

https://www.falconheights.org/government/departments/community-development-planning-and-zoning/comprehensive-plan

From Falcon Heights 2040 Comprehensive Plan:

Housing Goals:

3. Keep housing affordable, maintenance affordable, and accessible to all income levels.

General Land Use Goals

8. Encourage vertical development by minimizing impervious surfacing and maximizing space.

Larpenteur Corridor Policies

3. Allow flexibility in development standards on Larpenteur to recognize the challenge of redeveloping small properties on a scale similar to surrounding residential development.

Neighborhood Goals

5. To encourage the availability of a diverse housing stock.
6. To provide opportunities for affordable housing in proximity to public transportation, commercial services and recreational facilities.
11. On transit routes, allow the replacement of existing medium-density multi-family structures at equal or high density, incorporating best practices for conserving green space and promoting active living.

Commercial/Business Goals

3. To ensure access and safety for pedestrians and those using non-motorized transportation.
6. To provide convenient parking in sufficient amounts to meet parking demand.

NOTES AND ANALYSIS FROM STAFF

Planning Staff *– While the prior version of this Planned Unit Development had three main deviations from City Code, the updated version only has two – the overall height and the number of underground parking stalls. As a reminder, this could be built currently by right if both of those parts of City Code were met, or if the requirements of the existing PUD were met. Staff believe the two deviations from City Code are reasonable and in line with the City's 2040 Comprehensive Plan. Due to some ongoing discussions around the design of the building, such as potentially raising ceiling heights to 9', a Planned Unit Development also seems reasonable rather than individual variances to provide the flexibility in design that is often needed in larger projects and that is characteristic of PUDs.*

	The Planning Commission's task at this point is to hold a public hearing before discussing to determine if the requested revisions to the existing PUD should be permitted or not, according to the permitted City Code and existing PUD requirements, and the deviations from those requirements. *The amended PUD (Fairway Commons) will override the previous version (Amber Flats), but no decision that the Planning Commission or City Council make will reverse the existing PUD (Amber Flats), which would require a zoning district change. Additionally, any existing requirements set by the existing Amber Flats PUD may not be made more restrictive.* *Comments from Engineering, the Fire Marshal, the Building Inspector, and Ramsey County have been requested and any received have been attached. These are informational only and the applicant will be required to follow any requirements from these entities, but these are not part of the Planning Commission's review of the application.* *Engineering – Comments attached.* *Fire Marshal – Comments TBD* *Building Inspector – None currently – will wait for full plan set at permitting.* *Ramsey County – Comments from Senior Transportation Planner attached.* ***Future Steps*** After recommendation of approval or denial from the Planning Commission, City Council may act upon the proposed amendment. Pursuant to Minn. Stats. §15.99, the amendment must be approved or denied within 60 days from the date a properly completed application is received by the city.
Budget Impact	None.
Attachment(s)	- Application for PUD - Narrative from applicant - Proposed plans from applicant – Stormwater Report and Geotechnical Report have been removed from the packet due to length. These have been reviewed by the appropriate parties (engineering). - Posted Notice - Newspaper Notice - Newspaper Notice Affidavit - Notice to Property Owners / Residents - Section 113-35 from Falcon Heights City Code – Amendments to Zoning Code - Comments from City Engineering - Comments from Ramsey County + Draft Traffic Study Submitted to Ramsey County

	- DRAFT Ordinance 26-XX Amending Chapter 113 of the Falcon Heights City Code Concerning Amber Flats Planned Unit Development
Action(s) Requested	Staff requests a public hearing be held on this request, and recommends the Planning Commission vote for recommendation of City Council approval of the PUD, with additional conditions listed below. - Address any concerns from Engineering. - Address any concerns from Fire Marshal. - Address any concerns from Ramsey County. - 5% deviation from submitted plans allowed upon approval by City Administrator.

Docusign Envelope ID: DAA31716-5F0E-4D51-A878-FB5F465B0A54

City of Falcon Heights Planning Application

FOR INTERNAL USE:
Date received: _____
Receipt: _____

Action Requested By:

Name of Property Owner BUHL LARPENTEUR WEST LLC

Phone (h/c) 612-968-3728 (w) _____

Address of Property Owner 5353 WAYZATA BLVD, SUITE 502, SAINT LOUIS PARK MN 55416

Name of Applicant (if different) Velair Development Company

Address 7645 Lyndale Avenue South, Minneapolis, MN 55423 Phone 612-243-4623

Property Involved:

Address 1644 Larpenteur Avenue West, Falcon Heights, MN 55113

Legal Description See attached.

Property Identification Number (PIN) 212923110028 and 212923110029

Present Use of Property (check one):

- ☐ Single Family Dwelling
- ☐ Duplex/Two Family Dwelling
- ☐ Multi Family Complex
- ☐ Business/Commercial
- ☐ Government/Institutional
- ☒ Vacant Land [Parking Lot]

Action Requested (NON-REFUNDABLE):

- ☐ Variance ($500.00)
- ☐ Conditional Use Permit ($500.00)
- ☒ Rezoning, Zoning Amendment ($500.00)
- ☐ Comprehensive Plan Amendment ($550.00)
- ☐ Lot Split ($250.00)
- ☐ Site Plan Review ($100.00)
- ☐ Subdivision (Fee on request)
- ☐ Other (Please Specify) _____

The above Application Fees do not include any additional fees that might be required, including legal, engineering, consulting and additional City services. Applicants should meet with City Staff prior to submitting application to discuss applicable ordinances, required attachments, timelines and fees.
Credit card charges will incur a 3.1% + $0.30 convenience fee.

Brief Summary of Request (applicant may submit letter with details of request):

Velair Development Company is proposing to redevelop the existing parking lot into a four story 110-unit age-restricted apartment building. The Applicant is requesting a PUD amendment to allow for the proposed use.

I certify that all statements on this application are true and correct:

DocuSigned by:
Pete Dranovic
6BB64C1B7E8D423...

Signature of Property Owner (required)

Date: 2/26/2026

Signature of Applicant (if applicable)

Date: 3/2/2026

Planning Commission meeting: _____ City Council meeting: _____ Approved ___ Denied ___

Docusign Envelope ID: 4CF608EF-5CAD-4838-A760-1F31F5DC462D

EXHIBIT A

Legal Description of Property

{*To be confirmed by the Commitment.*}

PARCEL 1:

The East 250 feet of the North 500 feet except the West 150 feet of the East 160 feet of the North 283 feet of the Northwest quarter of the Northeast quarter of the Northeast quarter of Section 21, Township 29, Range 23.

PID: 212923110029

PARCEL 2:

The West 150 feet of the East 160 feet of the North 283 feet of the Northwest quarter of the Northeast quarter of the Northeast quarter of Section 21, Township 29, Range 23, West of the Fourth Principal Meridian.

PID: 212923110028

31236393v9

FAIRWAY COMMONS PUD

Planning Commission | City Council

March 24, 2026 | April 8, 2026

DEVELOPMENT TEAM

Velair Development Company ("VDC") is an affordable housing developer based in Richfield, MN. Our mission is to provide quality housing that is aesthetically pleasing, environmentally conscious, and built to last. Our group has developed 50+ properties encompassing 3,500+ residential units, mostly in the Twin Cities and Rochester, MN areas. We operate and long-term own all our affordable housing developments, which solidifies our commitment to providing a high-quality living environment for our residents.

Velair Property Management ("VPM") is our in-house property management group. They oversee the day-to-day operations of our entire MN-based portfolio. VPM is deeply engrained with housing, actively managing over 3,000 housing units. They are a critical asset in our team's ability to deliver high quality housing.

DEVELOPMENT PROPOSAL

VDC is proposing to develop a 110-unit senior (55+) affordable apartment building at 1644 Larpenteur Avenue West to be known as "Fairway Commons". The building will include a mix of studio, one, and two-bedroom floorplans across four stories of residential and one level of underground parking. Gross square footage of the building is estimated at 126,329 square feet, including the underground parking area.

AMENITIES

Common Areas
- Underground parking
- Community room
- Fitness center
- Library/Craft room
- Secure package room
- Outdoor patio
- Bicycle storage

Units
- Washer/Dryer
- Quartz countertops
- Luxury vinyl plank flooring
- Temperature control via thermostat
- High speed internet hookups

SITE, ACCESS, LAND USE AND ZONING

The project will be developed on a 2.58-acre parcel, just west of the existing Amber Union property, on an underutilized parking lot. Resident and public access to the site will be provided from the existing curb cut along Larpenteur Avenue. The existing sidewalks along Larpenteur Avenue will provide pedestrian access to nearby transit, commercial, and park space.

VDC is exploring the option to move the existing Larpenteur Avenue curb cut approximately 60 lineal feet to the east, to better align with the parking aisle drive lane and improve vehicle access to and from the site. The new curb cut location is currently being reviewed and will require approval by Ramsey County.

The site is currently guided Mixed Use Residential TOD. A PUD was approved in January 2024 for a 96-unit apartment building called Amber Flats. A new or amended PUD will need to be approved to accommodate our proposal, which includes changes to the site plan, unit mix, and façades. We believe this property is a great fit for senior-oriented housing, in part from the following:

1. Lack of affordable senior product in local market.
2. Transit-served.
3. Nearby commercial.
4. Compatible with neighboring uses.

Surrounding uses include commercial (north), high density residential (east), low density residential (southeast), and the MN State Fairgrounds (south and west). The existing stormwater pond and the eight (8) mature Maple Trees in the southeast corner of the property will remain, providing appropriate buffering from the neighboring single family use.

Please reference page 8 of the architectural drawing set for proposed building elevations. VDC is exploring the use of geothermal heating and cooling systems. If geothermal is implemented, then the metal wall sleeves will be eliminated from the exterior facades. Geothermal will have no other material impacts to this PUD request.

PARKING

The underlying R-5M zoning requires one (1) parking stall per unit. Fairway Commons will have one level of climate controlled underground parking containing 72 stalls and an additional 44 at-grade surface stalls for a total of 116 parking stalls (1.05 parking stalls per unit). This equates to 0.91 parking stalls per bedroom, which exceeds the parking stalls per bedroom for the existing Amber Union building (0.51 spaces per bedroom) and is in line with the PUD approved Amber Flats proposal (0.90 stalls per bedroom).

Development	Total Units	Total Bedrooms	Parking Count	Parking / Unit	Parking / Bedroom
Amber Union	125	264	135	1.08	0.51
Amber Flats PUD	96	134	121	1.26	0.90
Fairway Commons	110	128	*116	1.05	0.91

*Does NOT include 54 existing surface stalls on 1644 Larpenteur Ave W property that will be preserved and set-aside for use by Amber Union.

Additionally, the property is less than a 1,000-walking distance from the A Line BRT and less than a 200 ft walking distance from Bus Route 61. Based on our group's extensive operating experience, we are confident that the proposed parking is adequate to meet the full parking needs of the building.

AFFORDABILITY, UNIT MIX, RESIDENT QUALIFICATIONS

The project will have rent and income restrictions that average to the 60% Area Median Income (AMI) limit. In 2025, the 60% AMI limit for a 2-person household was $63,600. Rents are currently underwritten at the following:

Unit Type	Studio	1 Bedroom	2 Bedrooms
Number of Units	16	76	18
Rents	$645 - $1,104	$1,346 - $1,495	$1,795

The housing will be independent living. At least one member of each household must be 55+ years of age. All other household members must be 40+ years of age. All households must income qualify and pass criminal background and financial credit checks. Total estimated resident populations are below.

- Total estimated resident population = 175
- Total estimated adults = 175
- Total estimated school age children = 0

SECURITY, MANAGEMENT, MAINTENANCE PLAN

Fairway Commons, Limited Partnership will be the project-specific entity that long-term owns and operates this development. The property manager, VPM, takes pride in providing a safe and high-quality living environment for the residents, which the following actions help to accomplish:

- **Access control:** Entrances always locked. Access control via fob.
- **Security cameras:** In parking areas, entrances, common areas, stairwells, hallways, elevator cab.
- **Resident screening:** Income qualify, age requirement, criminal background check, financial credit check.
- **On-Site Personnel:** Property manager. Maintenance technician. Caretaker. Roving regional property manager.
- **Meeting with local police department prior to first occupancy:** VDC / VPM meet with police department prior to opening. Opportunity to discuss best management practices and establish relationship between Owner, VPM, and police.
- **Replacement Reserves:** Property required to fund a minimum of $33,000 annually into a Repair & Replacement Reserve. The reserve must be used for capital improvements and physical maintenance needs.
- **Inspections:** Periodic inspections by the lender, investor, housing authority, and city.

Maintenance and operations of all on-site improvements, including the apartment building, parking lot, stormwater facilities, private utilities, sidewalks, and greenspace, will be the responsibility of VPM.

NEIGHBORHOOD MEETING:

VDC held a neighborhood meeting on February 4th, 2026 to present the project and gather neighbor feedback. A little over ten (10) individuals attended the meeting, mostly from the Hollywood Court area. Topics raised during the Q&A session focused on access, building safety, in-unit features, snow storage, trash/recycling, site buffering, and building appearance. As a result of the meeting, VDC has taken the following actions: 1) pursuing new curb cut along Larpenteur Ave to improve vehicle access, 2) revised streetscape features along Larpenteur Ave to improve snow storage, 3) added landscape screening around the dumpster pad, and 4) confirmed the eight (8) mature maple trees in SE corner will be preserved. Some discussion centered on the neighboring Amber Union property, which VDC does not own or operate.

BENEFITS OF DEVELOPMENT

Benefits provided by this development include, but are not limited to, the following:

- **New Housing:** Addition of 110 newly constructed housing units that will provide a high-quality affordable housing option to seniors living in and around Falcon Heights.
- **Boost Commercial Demand:** Additional households will provide economic boost to nearby commercial users.
- **Increase Local Tax Base:** Projected to generate approximately $75,000 of annual property taxes.
- **Issuance Fee:** Projected $50,000 to $60,000 bond issuance fee paid to City.
- **Development of Key Site:** The 2.58-acre site is a vastly underutilized parking lot. The proposed development will be of high quality, is dense, and is compatible with its surrounding uses. The proposal is the highest and best use of the subject property.

DEVELOPMENT SCHEDULE

Development Schedule:

- December 2025: City Council Workshop, Bond Inducement Resolution [Complete]
- January 2026: MMB Bond Application [Complete]
- February 4, 2026: Neighborhood Meeting [Complete]
- March 24, 2026: Planning Commission
- April 8, 2026: City Council
- May 2026: Submit for Building Permit
- June-July 2026: Secure Building Permit, Close on Financing, Start Construction
- September 2027: Construction Complete, Lease-up Begins

Velair Development Company looks forward to working with the City of Falcon Heights to deliver a high-quality housing development where people can live at an affordable price. Please reach out with any questions or comments.

Thank You,

Marty O'Connell

Marty O'Connell
Senior Development Associate
VELAIR

FAIRWAY COMMONS

1644 Larpenteur Ave W, Falcon Heights, 55113

CONCEPTUAL RENDERING

CONTENTS

SITE CONTEXT	0.2
SITE PLAN	2.0
FLOOR PLANS - LEVEL -1	3.0
FLOOR PLANS - LEVEL 1	3.1
FLOOR PLANS - LEVEL 2-4	3.2
COMMON AREAS	3.5
EXTERIOR MATERIALS	6.0
EXTERIOR ELEVATIONS	6.1

3/2/2026 2:27:36 PM

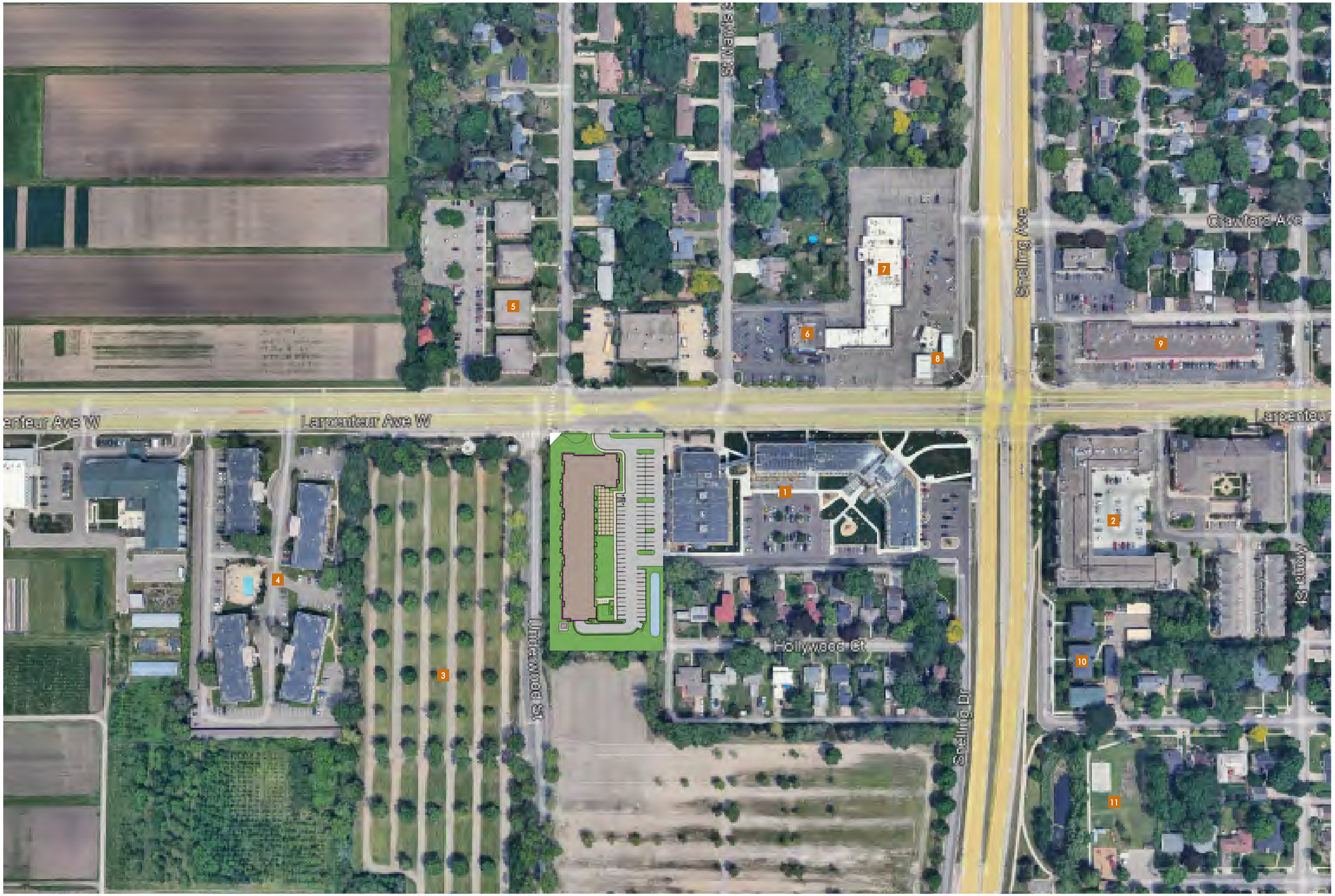

SITE CONTEXT PLAN KEY

1. AMBER UNION
2. FALCON HEIGHTS
3. MINNESOTA STATE FAIR PARKING
4. LARPENTEUR MANOR APARTMENT
5. FALCON ARMS APARTMENTS
6. STOUT'S PUB & GRILL
7. FALCON CENTER
8. BP GAS STATION
9. FALCON CROSSING
10. CAROUSEL FLATS
11. CURTISS FIELD PARK

1 Site Location Aerial
1" = 200'-0"

N

3/2/2026 2:27:51 PM

SITE PLAN KEY

1. BUILDING ENTRANCE
2. GARAGE ENTRANCE
3. COMMUNITY PATIO
4. LANDSCAPE GARDEN
5. STORMWATER INFILTRATION BASIN
6. BIKE RACKS

UNIT MIX - GROSS AREA

Name	Count	Unit Gross Area Main Floor	Total Area	%
1BR				
Unit A1	40	663 SF	26,510 SF	36%
Unit A2	36	759 SF	27,315 SF	33%
	76		53,825 SF	69%
2BR				
Unit C1	10	1,243 SF	12,433 SF	9%
Unit C2	4	1,254 SF	5,017 SF	4%
Unit C3	4	1,289 SF	5,157 SF	4%
	18		22,608 SF	16%
Studio				
Unit S1	16	552 SF	8,836 SF	15%
	16		8,836 SF	15%
Grand total	110		85,268 SF	100%

PARKING EASEMENT

Level	Type	Count
Level 1	Easement Parking	54
		54

PARKING

Level	Type	Count
Level -1	Garage Stalls	72
Level 1	Surface Stalls	44
		116

GROSS AREA - TOTAL

Level	Area
Level 4	25,193 SF
Level 3	25,193 SF
Level 2	25,193 SF
Level 1	25,192 SF
Level -1	25,559 SF
Grand total	126,329 SF

Approx. FAR: 0.9

1 SD Site Plan
1" = 60'-0"

N

kaas wilson architects

SITE PLAN

FAIRWAY COMMONS

1644 Larpenter Ave, Falcon Heights, Minnesota 25127

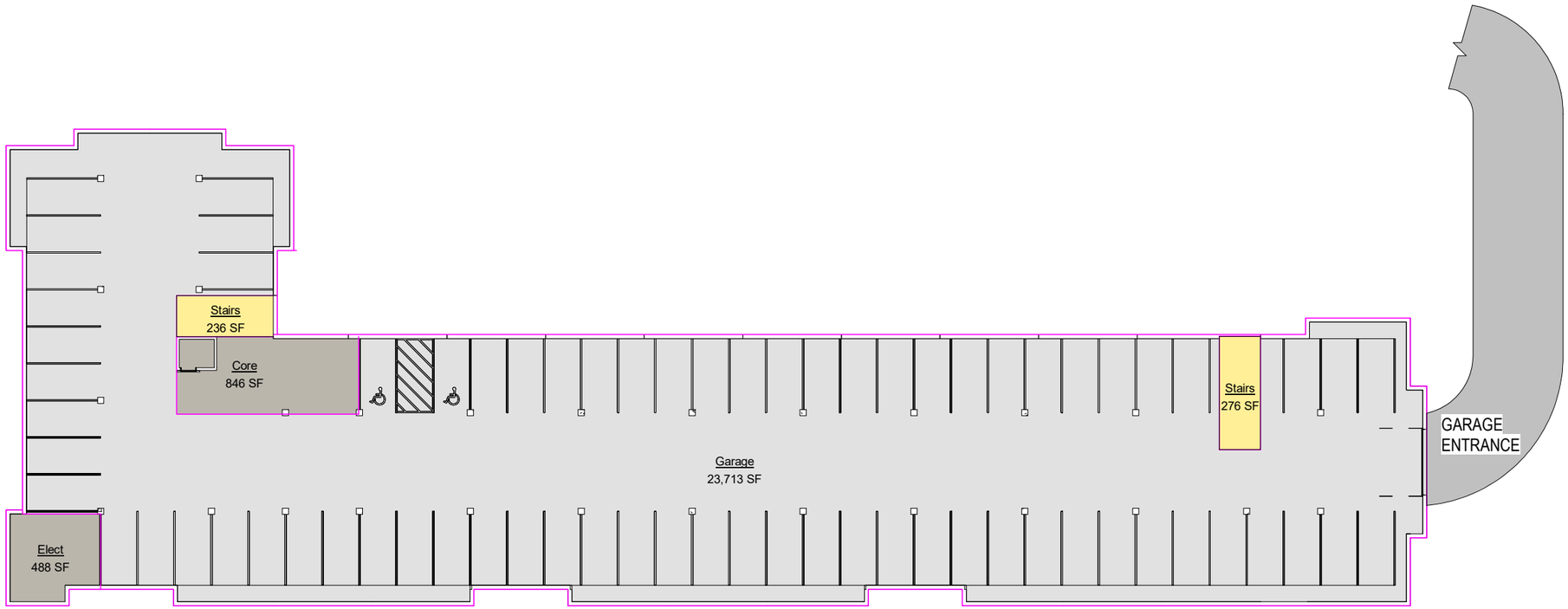

1 Level -1
1/32" = 1'-0"

N

kaas wilson architects

FLOOR PLANS - LEVEL -1

FAIRWAY COMMONS

1644 Larpenter Ave, Falcon Heights, Minnesota 25127

1 Level 1
1/32" = 1'-0"

kaas wilson architects

FLOOR PLANS - LEVEL 1

FAIRWAY COMMONS

1644 Larpenter Ave, Falcon Heights, Minnesota 25127

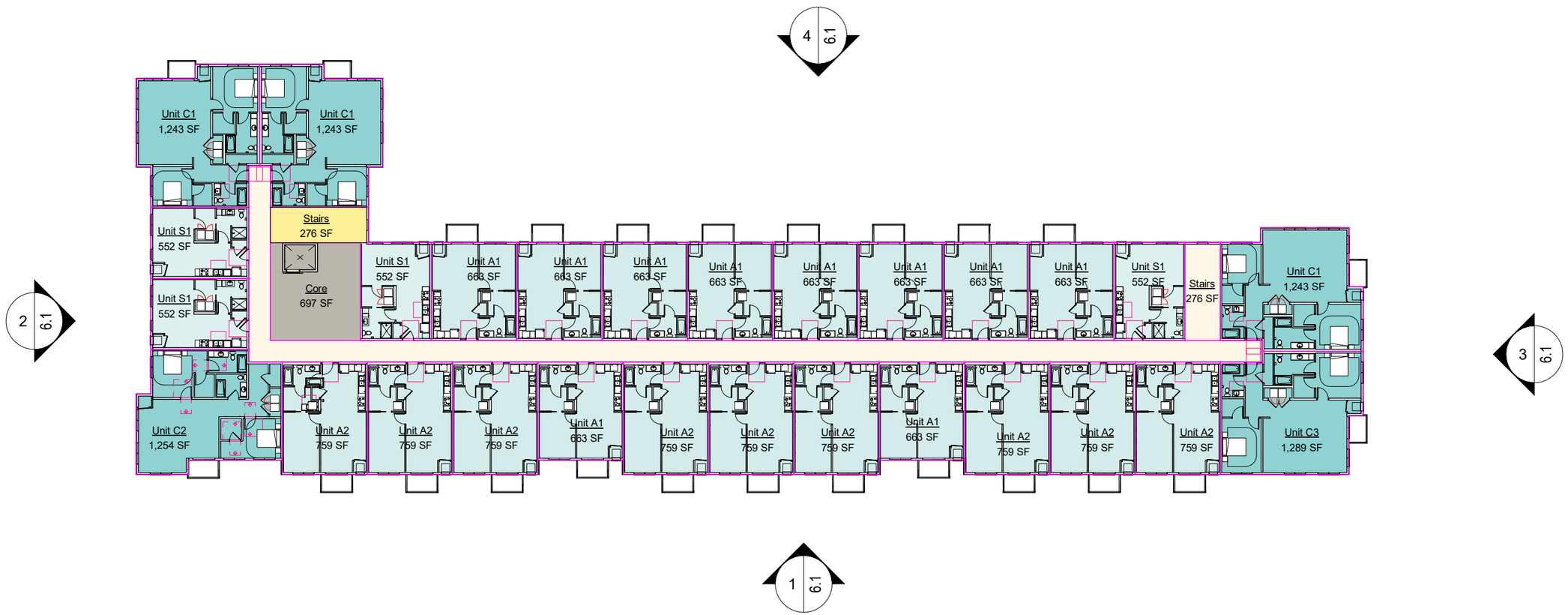

1 Level 2
1/32" = 1'-0"

N

FLOOR PLANS - LEVEL 2-4

FAIRWAY COMMONS

kaas wilson architects

1644 Larpenter Ave, Falcon Heights, Minnesota 25127

EXTERIOR MATERIALS

Material Mark	Description	Image
4.1	Country Materials Corp. - Blackened Ash	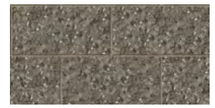
5.1	Prefin. Metal Coping - Color: Black	
7.1	Siding-JamesHardie-AlternatingLap-4/4/8-Smooth-IronGray	
7.2	Siding-JamesHardie-Board&Batten-Smooth-CobbleStone	
7.3	Siding-JamesHardie-AlternatingLap-4/4/8-Smooth-EveningBlue	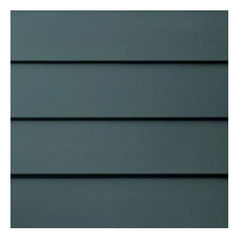
7.4	Siding-JamesHardie-AlternatingLap-4/4/8-Smooth-GraySlate	

EXTERIOR MATERIALS

Material Mark	Description	Image
7.5	Siding-JamesHardie-Panel-Smooth-CobbleStone	
7.6	Siding-JamesHardie-Panel-Smooth-IronGray	
7.7	Siding-JamesHardie-Board&Batten-Smooth-IronGray	
8.1	Window - White Exterior Finish	

3/2/2026 2:28:06 PM

1 Elevation - West
1" = 30'-0"

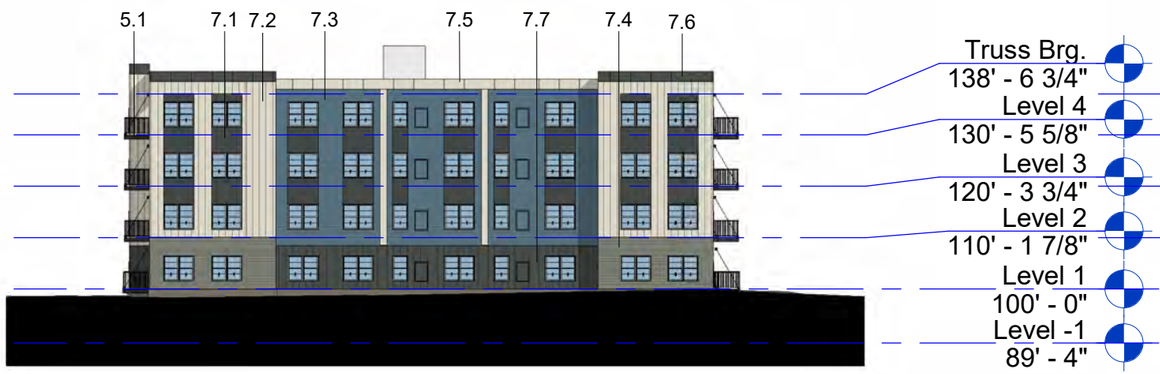

2 Elevation - North
1" = 30'-0"

3 Elevation - South
1" = 30'-0"

4 Elevation - East
1" = 30'-0"

kaas wilson architects

EXTERIOR ELEVATIONS

FAIRWAY COMMONS

1644 Larpenter Ave, Falcon Heights, Minnesota 25127

FAIRWAY COMMONS APARTMENTS

FALCON HEIGHTS, MINNESOTA

ISSUED FOR: CITY SUBMITTAL

PROJECT CONTACTS		
	NAME & ADDRESS	CONTACT
CIVIL ENGINEER	CIVIL SITE GROUP 5000 GLENWOOD AVE GOLDEN VALLEY, MN 55422	DAVID KNAEBLE 612-615-0060 DKNAELBLE@CIVILSITEGROUP.COM
LANDSCAPE ARCHITECT	CIVIL SITE GROUP 5000 GLENWOOD AVE GOLDEN VALLEY, MN 55422	ROBERT BINDER 612-615-0060 RBINDER@CIVILSITEGROUP.COM
PROPERTY OWNER / DEVELOPER	VELAIR DEVELOPMENT COMPANY 7645 LYNDALE AVE SOUTH #300 MINNEAPOLIS, MN, 55423	MARTY O'CONNELL 612-243-4623 MARTYOCONNELL@VELAIRDC.COM
ARCHITECT	KAAS WILSON ARCHITECTS 1301 AMERICAN BOULEVARD E #100 BLOOMINGTON, MN 55425	COLLIN KAAS 612-879-6000 COLLINK@KAASWILSON.COM
SURVEYOR	CIVIL SITE GROUP 5000 GLENWOOD AVE GOLDEN VALLEY, MN 55422	RORY SYNSTELIEN 612-615-0060 X 712 RORY@CIVILSITEGROUP.COM
GEOTECHNICAL ENGINEER	CHOSEN VALLEY TESTING, INC. 245 ROSELAWN AVENUE E, #29 ST. PAUL, MN 55117	COLBY VERDEGAN 507-281-0968 VERDEGAN@CHOSENVALLEYTESTING.COM

1. ALL EXISTING UTILITY LOCATIONS SHOWN ARE APPROXIMATE. CONTACT "GOPHER STATE ONE CALL" (651-454-0002 OR 800-252-1166) FOR UTILITY LOCATIONS, 48 HOURS PRIOR TO CONSTRUCTION. THE CONTRACTOR SHALL REPAIR OR REPLACE ANY UTILITIES THAT ARE DAMAGED DURING CONSTRUCTION AT NO COST TO THE OWNER.
2. CONTRACTOR SHALL CONFIRM THAT THE EXISTING CONDITIONS FOR THE SITE MATCH WHAT IS SHOWN ON THE DRAWINGS INCLUDED PRIOR TO CONSTRUCTION.
3. ALL NECESSARY INSPECTIONS AND/OR CERTIFICATIONS REQUIRED BY CODES AND/OR UTILITY SERVICES COMPANIES SHALL BE PERFORMED PRIOR TO ANNOUNCED BUILDING POSSESSION AND THE FINAL CONNECTION OF SERVICES.
4. ALL GENERAL CONTRACTOR WORK TO BE COMPLETED (EARTHWORK, FINAL UTILITIES, AND FINAL GRADING) BY THE MILESTONE DATE IN PROJECT DOCUMENTS.
5. CIVIL SITE GROUP SHALL HAVE NO LIABILITY WHATSOEVER FOR ANY COSTS ARISING OUT OF THE CLIENTS DECISION TO OBTAIN BIDS OR PROCEED WITH CONSTRUCTION BEFORE CIVIL SITE GROUP HAS ISSUED FINAL, FULLY-APPROVED AND STAMPED PLANS AND SPECIFICATIONS. THE CLIENT ACKNOWLEDGES THAT ALL PLANS ARE SUBJECT TO SUBSTANTIAL REVISION. CONTRACTOR IS RESPONSIBLE FOR FOLLOWING THE MOST RECENT ISSUANCE OF PLANS FOR CONSTRUCTION PURPOSES.
6. PLAN SET IS NOT USABLE FOR CONSTRUCTION UNTIL PLANS HAVE BEEN FULLY APPROVED AND STAMPED BY THE REQUIRED REVIEWING AUTHORITIES AND NO ADDITIONAL REVIEWS ARE REQUIRED.

Know what's **below.**
Call before you dig.

SHEET INDEX

SHEET NUMBER	SHEET TITLE
C0.0	TITLE SHEET
C1.0	REMOVALS PLAN
C2.0	SITE PLAN
C2.1	OVERALL SITE PLAN & TURNING MOVEMENT
C3.0	GRADING PLAN
C4.0	UTILITY PLAN
C5.0	CIVIL DETAILS
C5.1	CIVIL DETAILS
C5.2	CIVIL DETAILS
L1.0	LANDSCAPE PLAN
L1.1	LANDSCAPE PLAN NOTES & DETAILS
SW1.0	SWPPP - EXISTING CONDITIONS
SW1.1	SWPPP - PROPOSED CONDITIONS
SW1.2	SWPPP - DETAILS
SW1.3	SWPPP - NARRATIVE
SW1.4	SWPPP - ATTACHMENTS
SW1.5	SWPPP - ATTACHMENTS

CivilSite GROUP
Civil Engineering * Surveying * Landscape Architecture
5000 Glenwood Avenue
Golden Valley, MN 55422
civilsitegroup.com 612-615-0060

PRELIMINARY: NOT FOR CONSTRUCTION

PROJECT
FAIRWAY COMMONS APARTMENTS
1644 LARPENTEUR AVE W, FALCON HEIGHTS, MN 55113

OWNER
VELAIR DEVELOPMENT COMPANY
7645 LYNDALE AVE SOUTH #300, MINNEAPOLIS, MN, 55423

I HEREBY CERTIFY THAT THIS PLAN, SPECIFICATION, OR REPORT WAS PREPARED BY ME OR UNDER MY DIRECT SUPERVISION AND THAT I AM A DULY LICENSED PROFESSIONAL ENGINEER UNDER THE LAWS OF THE STATE OF MINNESOTA.

David J. Knaeble

David J. Knaeble
DATE 03/02/2026 LICENSE NO. 48776

ISSUE/SUBMITTAL SUMMARY

DATE	DESCRIPTION
03/02/2026	CITY SUBMITTAL

PROJECT MANAGER	DAVID KNAEBLE
CONTACT NUMBER	612-615-0060
DRAWN BY	BN
REVIEWED BY	DK
PROJECT NUMBER	25503

REVISION SUMMARY

DATE	DESCRIPTION

TITLE SHEET

C0.0

© COPYRIGHT 2026 CIVIL SITE GROUP INC.

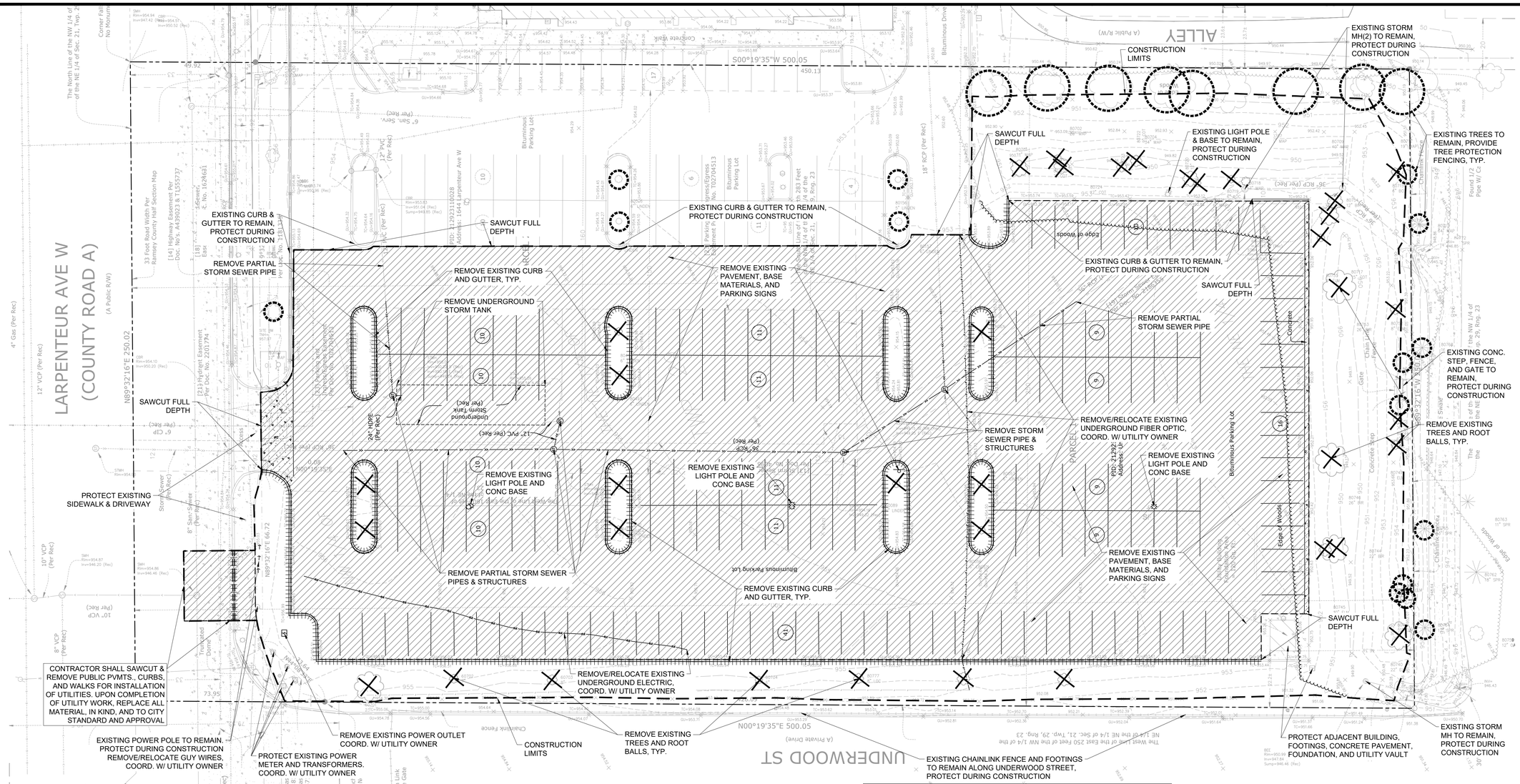

REMOVAL NOTES:

1. ALL EXISTING UTILITY LOCATIONS SHOWN ARE APPROXIMATE. CONTACT "GOPHER STATE ONE CALL" (651-454-0002 OR 800-252-1166) FOR UTILITY LOCATIONS, 48 HOURS PRIOR TO CONSTRUCTION. THE CONTRACTOR SHALL REPAIR OR REPLACE ANY UTILITIES THAT ARE DAMAGED DURING CONSTRUCTION AT NO COST TO THE OWNER.
2. SEE STORM WATER POLLUTION PREVENTION PLAN (SWPPP) PLAN FOR CONSTRUCTION STORM WATER MANAGEMENT PLAN.
3. REMOVAL OF MATERIALS NOTED ON THE DRAWINGS SHALL BE IN ACCORDANCE WITH MNDOT, STATE AND LOCAL REGULATIONS.
4. REMOVAL OF PRIVATE UTILITIES SHALL BE COORDINATED WITH UTILITY OWNER PRIOR TO CONSTRUCTION ACTIVITIES.
5. EXISTING PAVEMENTS SHALL BE SAWCUT IN LOCATIONS AS SHOWN ON THE DRAWINGS OR THE NEAREST JOINT FOR PROPOSED PAVEMENT CONNECTIONS.
6. REMOVED MATERIALS SHALL BE DISPOSED OF TO A LEGAL OFF-SITE LOCATION AND IN ACCORDANCE WITH STATE AND LOCAL REGULATIONS.
7. ABANDON, REMOVAL, CONNECTION, AND PROTECTION NOTES SHOWN ON THE DRAWINGS ARE APPROXIMATE. COORDINATE WITH PROPOSED PLANS.
8. EXISTING ON-SITE FEATURES NOT NOTED FOR REMOVAL SHALL BE PROTECTED THROUGHOUT THE DURATION OF THE CONTRACT.
9. PROPERTY LINES SHALL BE CONSIDERED GENERAL CONSTRUCTION LIMITS UNLESS OTHERWISE NOTED ON THE DRAWINGS. WORK WITHIN THE GENERAL CONSTRUCTION LIMITS SHALL INCLUDE STAGING, DEMOLITION AND CLEAN-UP OPERATIONS AS WELL AS CONSTRUCTION SHOWN ON THE DRAWINGS.
10. MINOR WORK OUTSIDE OF THE GENERAL CONSTRUCTION LIMITS SHALL BE ALLOWED AS SHOWN ON THE PLAN AND PER CITY REQUIREMENTS. FOR ANY WORK ON ADJACENT PRIVATE PROPERTY, THE CONTRACTOR SHALL OBTAIN WRITTEN PERMISSION FROM THE ADJACENT PROPERTY OWNER PRIOR TO ANY WORK.
11. DAMAGE BEYOND THE PROPERTY LIMITS CAUSED BY CONSTRUCTION ACTIVITY SHALL BE REPAIRED IN A MANNER APPROVED BY THE ENGINEER/LANDSCAPE ARCHITECT OR IN ACCORDANCE WITH THE CITY.
12. PROPOSED WORK (BUILDING AND CIVIL) SHALL NOT DISTURB EXISTING UTILITIES UNLESS OTHERWISE SHOWN ON THE DRAWINGS AND APPROVED BY THE CITY PRIOR TO CONSTRUCTION.
13. SITE SECURITY MAY BE NECESSARY AND PROVIDED IN A MANNER TO PROHIBIT VANDALISM, AND THEFT, DURING AND AFTER NORMAL WORK HOURS, THROUGHOUT THE DURATION OF THE CONTRACT. SECURITY MATERIALS SHALL BE IN ACCORDANCE WITH THE CITY.
14. VEHICULAR ACCESS TO THE SITE SHALL BE MAINTAINED FOR DELIVERY AND INSPECTION ACCESS DURING NORMAL OPERATING HOURS. AT NO POINT THROUGHOUT THE DURATION OF THE CONTRACT SHALL CIRCULATION OF ADJACENT STREETS BE BLOCKED WITHOUT APPROVAL BY THE CITY PRIOR TO CONSTRUCTION ACTIVITIES.
15. ALL TRAFFIC CONTROLS SHALL BE PROVIDED AND ESTABLISHED PER THE REQUIREMENTS OF THE MINNESOTA MANUAL ON UNIFORM TRAFFIC CONTROL DEVICES (MMUTCD) AND THE CITY. THIS SHALL INCLUDE, BUT NOT BE LIMITED TO, SIGNAGE, BARRICADES, FLASHERS, AND FLAGGERS AS NEEDED. ALL PUBLIC STREETS SHALL REMAIN OPEN TO TRAFFIC AT ALL TIMES. NO ROAD CLOSURES SHALL BE PERMITTED WITHOUT APPROVAL BY THE CITY.
16. SHORING FOR BUILDING EXCAVATION MAY BE USED AT THE DISCRETION OF THE CONTRACTOR AND AS APPROVED BY THE OWNERS REPRESENTATIVE AND THE CITY PRIOR TO CONSTRUCTION ACTIVITIES.
17. STAGING, DEMOLITION, AND CLEAN-UP AREAS SHALL BE WITHIN THE PROPERTY LIMITS AS SHOWN ON THE DRAWINGS AND MAINTAINED IN A MANNER AS REQUIRED BY THE CITY.
18. ALL EXISTING SITE TRAFFIC/REGULATORY SIGNAGE TO BE INVENTORIED AND IF REMOVED FOR CONSTRUCTION SHALL BE RETURNED TO LGU.
19. ALL EXISTING UTILITY LOCATIONS SHOWN ARE APPROXIMATE. CONTACT "GOPHER STATE ONE CALL" (651-454-0002 OR 800-252-1166) FOR UTILITY LOCATIONS, 48 HOURS PRIOR TO CONSTRUCTION. THE CONTRACTOR SHALL REPAIR OR REPLACE ANY UTILITIES THAT ARE DAMAGED DURING CONSTRUCTION AT NO COST TO THE OWNER.

CITY OF FALCON HEIGHTS REMOVAL NOTES:

1. RESERVED FOR CITY SPECIFIC REMOVAL NOTES.

OWNER INFORMATION

VELAIR DEVELOPMENT COMPANY
7645 LYNDALE AVE SOUTH #300
MINNEAPOLIS, MN, 55423
MARTY O'CONNELL
612-243-4623
MARTYOCONNELL@VELAIRDC.COM

EROSION CONTROL NOTES:

SEE SWPPP ON SHEETS SW1.0 - SW1.5

REMOVALS PLAN LEGEND:

- REMOVAL OF PAVEMENT AND ALL BASE MATERIAL, INCLUDING BIT., CONC., AND GRAVEL PVMTS.
- REMOVAL OF STRUCTURE INCLUDING ALL FOOTINGS AND FOUNDATIONS.
- REMOVAL OF TREES AND VEGETATION INCLUDING STUMPS AND ROOT SYSTEMS
- CONSTRUCTION LIMITS
- PROPERTY LINE
- REMOVE CURB AND GUTTER. IF IN RIGHT-OF-WAY, COORDINATE WITH LOCAL GOVERNING UNIT.
- TREE PROTECTION
- TREE REMOVAL - INCLUDING ROOTS AND STUMPS

Know what's below. Call before you dig.

1" = 20'-0"
10'-0" 0 20'-0"

CivilSite GROUP
Civil Engineering ˚ Surveying ˚ Landscape Architecture
5000 Glenwood Avenue
Golden Valley, MN 55422
civilsitegroup.com 612-615-0060

PRELIMINARY: NOT FOR CONSTRUCTION

PROJECT
FAIRWAY COMMONS APARTMENTS
1644 LARPENTEUR AVE W, FALCON HEIGHTS, MN 55113

OWNER
VELAIR DEVELOPMENT COMPANY
7645 LYNDALE AVE SOUTH #300, MINNEAPOLIS, MN, 55423

I HEREBY CERTIFY THAT THIS PLAN, SPECIFICATION, OR REPORT WAS PREPARED BY ME OR UNDER MY DIRECT SUPERVISION AND THAT I AM A DULY LICENSED PROFESSIONAL ENGINEER UNDER THE LAWS OF THE STATE OF MINNESOTA.

David J. Knaeble
DATE 03/02/2026 LICENSE NO. 48776

ISSUE/SUBMITTAL SUMMARY

DATE	DESCRIPTION
03/02/2026	CITY SUBMITTAL

PROJECT MANAGER	DAVID KNAEBLE
CONTACT NUMBER	612-615-0060
DRAWN BY	BN
REVIEWED BY	DK
PROJECT NUMBER	25503

REVISION SUMMARY

DATE	DESCRIPTION

REMOVALS PLAN

C1.0

© COPYRIGHT 2026 CIVIL SITE GROUP INC.

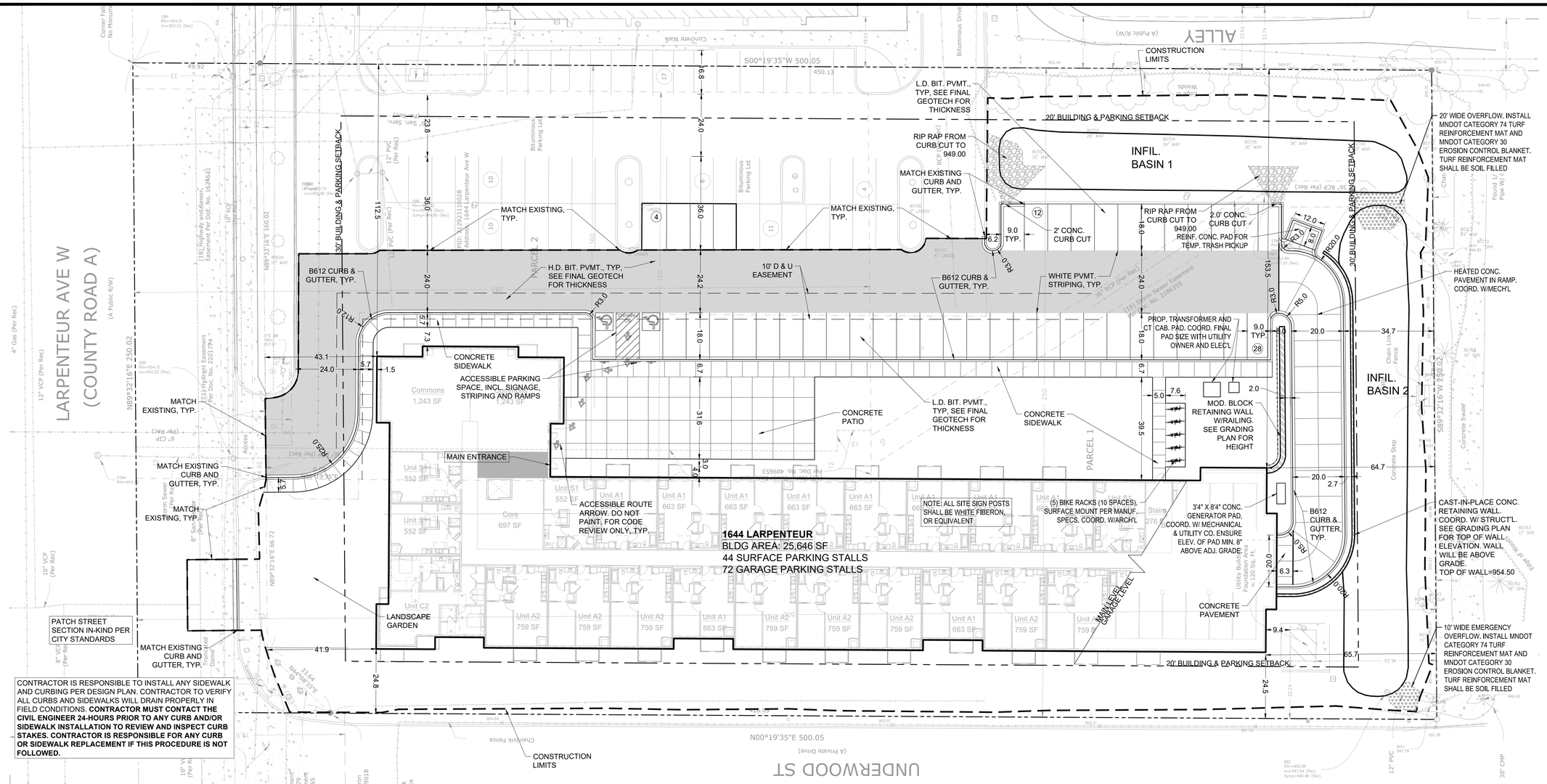

SITE LAYOUT NOTES:

1. ALL EXISTING UTILITY LOCATIONS SHOWN ARE APPROXIMATE. CONTACT "GOPHER STATE ONE CALL" (651-454-0002 OR 800-252-1166) FOR UTILITY LOCATIONS, 48 HOURS PRIOR TO CONSTRUCTION. THE CONTRACTOR SHALL REPAIR OR REPLACE ANY UTILITIES THAT ARE DAMAGED DURING CONSTRUCTION AT NO COST TO THE OWNER.
2. CONTRACTOR SHALL VERIFY LOCATIONS AND LAYOUT OF ALL SITE ELEMENTS PRIOR TO BEGINNING CONSTRUCTION, INCLUDING BUT NOT LIMITED TO, LOCATIONS OF EXISTING AND PROPOSED PROPERTY LINES, EASEMENTS, SETBACKS, UTILITIES, BUILDINGS AND PAVEMENTS. CONTRACTOR IS RESPONSIBLE FOR FINAL LOCATIONS OF ALL ELEMENTS FOR THE SITE. ANY REVISIONS REQUIRED AFTER COMMENCEMENT OF CONSTRUCTION, DUE TO LOCATIONAL ADJUSTMENTS SHALL BE CORRECTED AT NO ADDITIONAL COST TO OWNER. ADJUSTMENTS TO THE LAYOUT SHALL BE APPROVED BY THE ENGINEER/LANDSCAPE ARCHITECT PRIOR TO INSTALLATION OF MATERIALS. STAKE LAYOUT FOR APPROVAL.
3. THE CONTRACTOR SHALL OBTAIN ALL NECESSARY PERMITS PRIOR TO CONSTRUCTION, INCLUDING A RIGHT-OF-WAY AND STREET OPENING PERMIT.
4. THE CONTRACTOR SHALL VERIFY RECOMMENDATIONS NOTED IN THE GEO TECHNICAL REPORT PRIOR TO INSTALLATION OF SITE IMPROVEMENT MATERIALS.
5. CONTRACTOR SHALL FIELD VERIFY COORDINATES AND LOCATION DIMENSIONS & ELEVATIONS OF THE BUILDING AND STAKE FOR REVIEW AND APPROVAL BY THE OWNERS REPRESENTATIVE PRIOR TO INSTALLATION OF FOOTING MATERIALS.
6. LOCATIONS OF STRUCTURES, ROADWAY PAVEMENTS, CURBS AND GUTTERS, BOLLARDS, AND WALKS ARE APPROXIMATE AND SHALL BE STAKED IN THE FIELD, PRIOR TO INSTALLATION, FOR REVIEW AND APPROVAL BY THE ENGINEER/LANDSCAPE ARCHITECT.
7. CURB DIMENSIONS SHOWN ARE TO FACE OF CURB. BUILDING DIMENSIONS ARE TO FACE OF CONCRETE FOUNDATION. LOCATION OF BUILDING IS TO BUILDING FOUNDATION AND SHALL BE AS SHOWN ON THE DRAWINGS.
8. THE CONTRACTOR SHALL SUBMIT SHOP DRAWINGS OR SAMPLES AS SPECIFIED FOR REVIEW AND APPROVAL BY THE ENGINEER/LANDSCAPE ARCHITECT PRIOR TO FABRICATION FOR ALL PREFABRICATED SITE IMPROVEMENT MATERIALS SUCH AS, BUT NOT LIMITED TO THE FOLLOWING, FURNISHINGS, PAVEMENTS, WALLS, RAILINGS, BENCHES, FLAGPOLES, LANDING PADS FOR CURB RAMPS, AND LIGHT AND POLES. THE OWNER RESERVES THE RIGHT TO REJECT INSTALLED MATERIALS NOT PREVIOUSLY APPROVED.
9. CROSSWALK STRIPING SHALL BE 24" WIDE WHITE PAINTED LINE, SPACED 48" ON CENTER PERPENDICULAR TO THE FLOW OF TRAFFIC. WIDTH OF CROSSWALK SHALL BE 5' WIDE. ALL OTHER PAVEMENT MARKINGS SHALL BE WHITE IN COLOR UNLESS OTHERWISE NOTED OR REQUIRED BY ADA OR LOCAL GOVERNING BODIES.
10. SEE SITE PLAN FOR CURB AND GUTTER TYPE. TAPER BETWEEN CURB TYPES-SEE DETAIL.
11. ALL CURB RADII ARE MINIMUM 3' UNLESS OTHERWISE NOTED.
12. CONTRACTOR SHALL REFER TO FINAL PLAT FOR LOT BOUNDARIES, NUMBERS, AREAS AND DIMENSIONS PRIOR TO SITE IMPROVEMENTS.
13. FIELD VERIFY ALL EXISTING SITE CONDITIONS, DIMENSIONS.
14. PARKING IS TO BE SET PARALLEL OR PERPENDICULAR TO EXISTING BUILDING UNLESS NOTED OTHERWISE.
15. ALL PARKING LOT PAINT STRIPING TO BE WHITE, 4" WIDE TYP.
16. BITUMINOUS PAVING TO BE "LIGHT DUTY" UNLESS OTHERWISE NOTED. SEE DETAIL SHEETS FOR PAVEMENT SECTIONS.
17. ALL TREES THAT ARE TO REMAIN ARE TO BE PROTECTED FROM DAMAGE WITH A CONSTRUCTION FENCE AT THE DRIP LINE. SEE LANDSCAPE DOCUMENTS.
18. CONTRACTOR IS RESPONSIBLE TO INSTALL ANY SIDEWALK AND CURBING PER DESIGN PLAN. CONTRACTOR TO VERIFY ALL CURBS AND SIDEWALKS WILL DRAIN PROPERLY IN FIELD CONDITIONS. **CONTRACTOR MUST CONTACT THE CIVIL ENGINEER 24-HOURS PRIOR TO ANY CURB AND/OR SIDEWALK INSTALLATION TO REVIEW AND INSPECT CURB STAKES. CONTRACTOR IS RESPONSIBLE FOR ANY CURB OR SIDEWALK REPLACEMENT IF THIS PROCEDURE IS NOT FOLLOWED.**
19. FINISH GRADING FOR HARDSCAPE AREAS IE. PARKING LOTS, CURBS, SIDEWALKS SHALL BE WITHIN 0.05 FEET. ADA AREAS MUST COMPLY WITH REQUIREMENTS ON PLANS AND ADA REGULATIONS. TOLERANCE WITHIN ADA AREAS IS 0.00 FEET DISCUSS ANY DEVIATIONS WITH ENGINEER PRIOR TO CONSTRUCTION. CONTRACTOR IS RESPONSIBLE FOR ANY CURB, SIDEWALK AND/OR PAVEMENT REPLACEMENT THAT DOES NOT MEET TOLERANCE/ADA REQUIREMENTS.

CITY OF FALCON HEIGHTS SITE SPECIFIC NOTES:

1. RESERVED FOR CITY SPECIFIC SITE NOTES.

OPERATIONAL NOTES

SNOW REMOVAL	ALL SNOW SHALL BE STORED ON-SITE OUTSIDE PARKING LOT. WHEN FULL, REMOVAL CO. SHALL REMOVE EXCESS OFF-SITE.
TRASH REMOVAL	TRASH SHALL BE PLACED IN EXTERIOR TRASH AREA AND REMOVED BY COMMERCIAL CO. WEEKLY.
DELIVERIES	DELIVERIES SHALL OCCUR AT THE FRONT DOOR VIA STANDARD COMMERCIAL DELIVERY VEHICLES (UPS, FED-EX, USPS).

OWNER INFORMATION

VELAIR DEVELOPMENT COMPANY
7645 LYNDALE AVE SOUTH #300
MINNEAPOLIS, MN, 55423
MARTY O'CONNELL
612-243-4623
MARTYOCONNELL@VELAIRDC.COM

SITE AREA CALCULATIONS	EXISTING CONDITION			PROPOSED CONDITION		
IMPERVIOUS SURFACES						
BUILDING COVERAGE	120 SF	0.1%		25,646 SF	22.8%	
PAVEMENT	82,322 SF	73.2%		44,853 SF	39.9%	
TOTAL	82,442 SF	73.3%	1.9 AC	70,499 SF	62.7%	1.6 AC
PERVIOUS SURFACES						
TOTAL	30,079 SF	26.7%	0.7 AC	42,022 SF	37.3%	1.0 AC
TOTAL SITE AREA	112,521 SF	100.0%	2.6 AC	112,521 SF	100.0%	2.6 AC
DIFFERENCE (EX. VS PROP.)	-11,943 SF	-10.6%				
DISTURBED AREA	88,935 SF	2.0 AC				

SITE PLAN LEGEND:

- LIGHT DUTY BITUMINOUS PAVEMENT (IF APPLICABLE). SEE GEOTECHNICAL REPORT FOR AGGREGATE BASE & WEAR COURSE DEPTH, SEE DETAIL.
- HEAVY DUTY BITUMINOUS PAVEMENT (IF APPLICABLE). SEE GEOTECHNICAL REPORT FOR AGGREGATE BASE & WEAR COURSE DEPTH, SEE DETAIL.
- CONCRETE PAVEMENT (IF APPLICABLE) AS SPECIFIED (PAD OR WALK) SEE GEOTECHNICAL REPORT FOR AGGREGATE BASE & CONCRETE DEPTHS, WITHIN ROW SEE CITY DETAIL, WITHIN PRIVATE PROPERTY SEE CSG DETAIL
- PROPERTY LINE
- CONSTRUCTION LIMITS
- CURB AND GUTTER-SEE NOTES (T.O.) TIP OUT GUTTER WHERE APPLICABLE-SEE PLAN
- CURB TAPER
- TRAFFIC DIRECTIONAL ARROW PAVEMENT MARKINGS
- SIGN AND POST ASSEMBLY. SHOP DRAWINGS REQUIRED.
  HC = ACCESSIBLE SIGN
  NP = NO PARKING FIRE LANE
  ST = STOP
  CP = COMPACT CAR PARKING ONLY
- ACCESSIBILITY ROUTE ARROW (IF APPLICABLE) DO NOT PAINT.

Know what's below. Call before you dig.

1" = 20'-0"
10'-0" 0 20'-0"

CivilSite GROUP
Civil Engineering ˚ Surveying ˚ Landscape Architecture
5000 Glenwood Avenue
Golden Valley, MN 55422
civilsitegroup.com 612-615-0060

PRELIMINARY: NOT FOR CONSTRUCTION

PROJECT
FAIRWAY COMMONS APARTMENTS
1644 LARPENTEUR AVE W, FALCON HEIGHTS, MN 55113

OWNER
VELAIR DEVELOPMENT COMPANY
7645 LYNDALE AVE SOUTH #300, MINNEAPOLIS, MN, 55423

I HEREBY CERTIFY THAT THIS PLAN, SPECIFICATION, OR REPORT WAS PREPARED BY ME OR UNDER MY DIRECT SUPERVISION AND THAT I AM A DULY LICENSED PROFESSIONAL ENGINEER UNDER THE LAWS OF THE STATE OF MINNESOTA.

David J. Knaeble
DATE 03/02/2026 LICENSE NO. 48776

ISSUE/SUBMITTAL SUMMARY

DATE	DESCRIPTION
03/02/2026	CITY SUBMITTAL

PROJECT MANAGER	DAVID KNAEBLE
CONTACT NUMBER	612-615-0060
DRAWN BY	BN
REVIEWED BY	DK
PROJECT NUMBER	25503

REVISION SUMMARY

DATE	DESCRIPTION

SITE PLAN

C2.0

© COPYRIGHT 2026 CIVIL SITE GROUP INC.

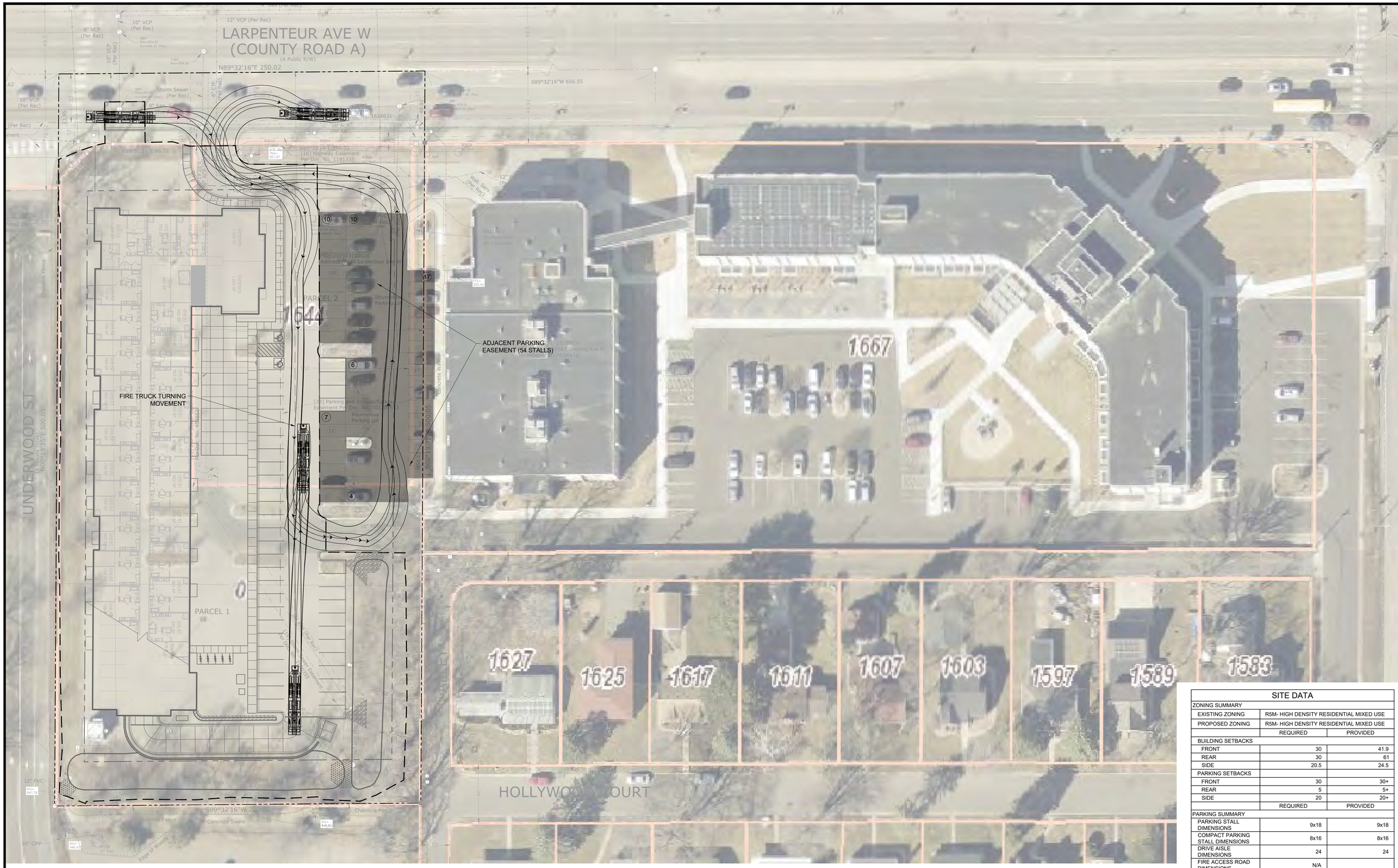

SITE DATA		
ZONING SUMMARY		
EXISTING ZONING	R5M- HIGH DENSITY RESIDENTIAL MIXED USE	
PROPOSED ZONING	R5M- HIGH DENSITY RESIDENTIAL MIXED USE	
	REQUIRED	PROVIDED
BUILDING SETBACKS		
FRONT	30	41.9
REAR	30	61
SIDE	20.5	24.5
PARKING SETBACKS		
FRONT	30	30+
REAR	5	5+
SIDE	20	20+
	REQUIRED	PROVIDED
PARKING SUMMARY		
PARKING STALL DIMENSIONS	9x18	9x18
COMPACT PARKING STALL DIMENSIONS	8x16	8x16
DRIVE AISLE DIMENSIONS	24	24
FIRE ACCESS ROAD DIMENSIONS	N/A	
	REQUIRED	PROVIDED
PARKING STALLS - SURFACE	44	44
PARKING STALLS - GARAGE	72	72
ADJACENT PARKING EASEMENT		
PARKING STALLS - SURFACE		54

SEE SHEET C2.0 FOR GENERAL SITE NOTES & LEGEND

Know what's **below.** **Call** before you dig.

N

1" = 30'-0"
15'-0" 0 30'-0"

CivilSite GROUP
Civil Engineering ˚ Surveying ˚ Landscape Architecture
5000 Glenwood Avenue
Golden Valley, MN 55422
civilsitegroup.com 612-615-0060

PRELIMINARY: NOT FOR CONSTRUCTION

PROJECT
FAIRWAY COMMONS APARTMENTS
1644 LARPENTEUR AVE W, FALCON HEIGHTS, MN 55113

OWNER
VELAIR DEVELOPMENT COMPANY
7645 LYNDALE AVE SOUTH #300, MINNEAPOLIS, MN, 55423

I HEREBY CERTIFY THAT THIS PLAN, SPECIFICATION, OR REPORT WAS PREPARED BY ME OR UNDER MY DIRECT SUPERVISION AND THAT I AM A DULY LICENSED PROFESSIONAL ENGINEER UNDER THE LAWS OF THE STATE OF MINNESOTA.

David J. Knaeble

David J. Knaeble

DATE 03/02/2026 LICENSE NO. 48776

ISSUE/SUBMITTAL SUMMARY

DATE	DESCRIPTION
03/02/2026	CITY SUBMITTAL

PROJECT MANAGER	DAVID KNAEBLE
CONTACT NUMBER	612-615-0060
DRAWN BY	BN
REVIEWED BY	DK
PROJECT NUMBER	25503

REVISION SUMMARY

DATE	DESCRIPTION

OVERALL SITE PLAN & TURNING MOVEMENT

C2.1

© COPYRIGHT 2026 CIVIL SITE GROUP INC.

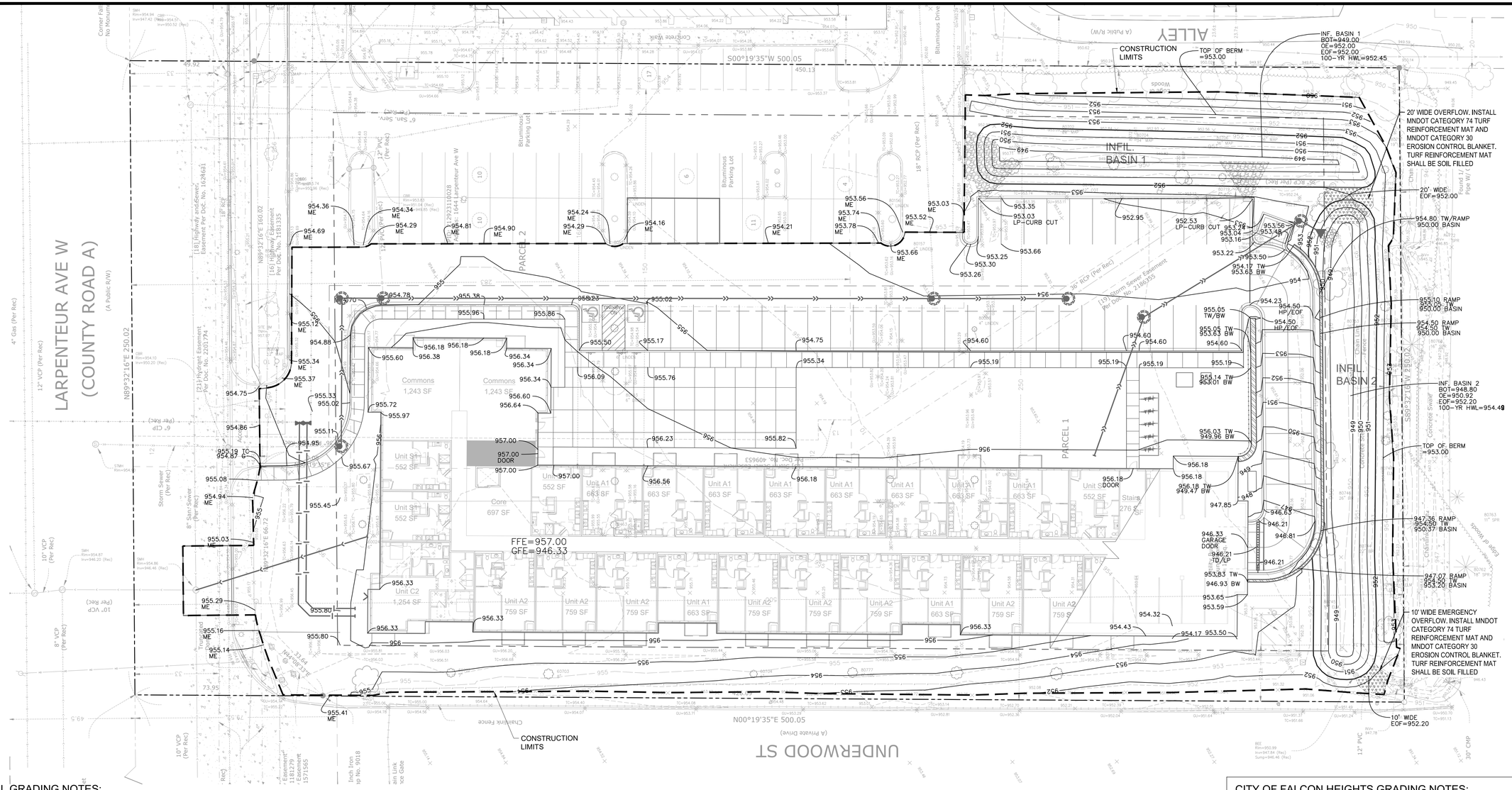

GENERAL GRADING NOTES:

1. **CONTRACTOR SHALL VERIFY ALL BUILDING ELEVATIONS, (FFE, LFE, GFE), PRIOR TO CONSTRUCTION BY CROSS CHECKING WITH ARCHITECTURAL, STRUCTURAL AND CIVIL ELEVATIONS FOR EQUIVALENT "100" ELEVATIONS. THIS MUST BE DONE PRIOR TO EXCAVATION AND INSTALLATION OF ANY FOOTING MATERIALS. VERIFICATION OF THIS COORDINATION SHALL BE CONFIRMED IN WRITING BY CIVIL, SURVEYOR, ARCHITECTURAL, STRUCTURAL AND CONTRACTOR PRIOR TO CONSTRUCTION.**
2. ALL EXISTING UTILITY LOCATIONS SHOWN ARE APPROXIMATE. CONTACT "GOPHER STATE ONE CALL" (651-454-0002 OR 800-252-1166) FOR UTILITY LOCATIONS, 48 HOURS PRIOR TO CONSTRUCTION. THE CONTRACTOR SHALL REPAIR OR REPLACE ANY UTILITIES THAT ARE DAMAGED DURING CONSTRUCTION AT NO COST TO THE OWNER.
3. SEE SITE PLAN FOR HORIZONTAL LAYOUT & GENERAL GRADING NOTES.
4. THE CONTRACTOR SHALL COMPLETE THE SITE GRADING CONSTRUCTION (INCLUDING BUT NOT LIMITED TO SITE PREPARATION, SOIL CORRECTION, EXCAVATION, EMBANKMENT, ETC.) IN ACCORDANCE WITH THE REQUIREMENTS OF THE OWNER'S SOILS ENGINEER. ALL SOIL TESTING SHALL BE COMPLETED BY THE OWNER'S SOILS ENGINEER. THE CONTRACTOR SHALL BE RESPONSIBLE FOR COORDINATING ALL REQUIRED SOIL TESTS AND INSPECTIONS WITH THE SOILS ENGINEER.
5. ANY ELEMENTS OF AN EARTH RETENTION SYSTEM AND RELATED EXCAVATIONS THAT FALL WITHIN THE PUBLIC RIGHT OF WAY WILL REQUIRE A "RIGHT OF WAY EXCAVATION PERMIT". CONTRACTOR IS RESPONSIBLE FOR AQUIRING THIS PERMIT PRIOR TO CONSTRUCTION IF APPLICABLE
6. GRADING AND EXCAVATION ACTIVITIES SHALL BE PERFORMED IN ACCORDANCE WITH THE NATIONAL POLLUTION DISCHARGE ELIMINATION SYSTEM (NPDES) PERMIT REQUIREMENTS & PERMIT REQUIREMENTS OF THE CITY.
7. PROPOSED SPOT GRADES ARE FLOW-LINE FINISHED GRADE ELEVATIONS, UNLESS OTHERWISE NOTED.
8. GRADES OF WALKS SHALL BE INSTALLED WITH 5% MAX. LONGITUDINAL SLOPE AND 1% MIN. AND 2% MAX. CROSS SLOPE, UNLESS OTHERWISE NOTED.
9. PROPOSED SLOPES SHALL NOT EXCEED 3:1 UNLESS INDICATED OTHERWISE ON THE DRAWINGS. MAXIMUM SLOPES IN MAINTAINED AREAS IS 4:1.
10. PROPOSED RETAINING WALLS, FREESTANDING WALLS, OR COMBINATION OF WALL TYPES GREATER THAN 4' IN HEIGHT SHALL BE DESIGNED AND ENGINEERED BY A REGISTERED RETAINING WALL ENGINEER. DESIGN DRAWINGS SHALL BE SUBMITTED FOR REVIEW AND APPROVAL PRIOR TO CONSTRUCTION.
11. THE CONTRACTOR SHALL BE RESPONSIBLE FOR MAINTENANCE OF GRADE STAKES THROUGHOUT THE DURATION OF CONSTRUCTION TO ESTABLISH PROPER GRADES. THE CONTRACTOR SHALL ALSO BE RESPONSIBLE FOR A FINAL FIELD CHECK OF FINISHED GRADES ACCEPTABLE TO THE ENGINEER/LANDSCAPE ARCHITECT PRIOR TO TOPSOIL AND SODDING ACTIVITIES.
12. IF EXCESS OR SHORTAGE OF SOIL MATERIAL EXISTS, THE CONTRACTOR SHALL TRANSPORT ALL EXCESS SOIL MATERIAL OFF THE SITE TO AN AREA SELECTED BY THE CONTRACTOR, OR IMPORT SUITABLE MATERIAL TO THE SITE.
13. EXCAVATE TOPSOIL FROM AREAS TO BE FURTHER EXCAVATED OR REGRADED AND STOCKPILE IN AREAS DESIGNATED ON THE SITE. THE CONTRACTOR SHALL SALVAGE ENOUGH TOPSOIL FOR RESPREADING ON THE SITE AS SPECIFIED. EXCESS TOPSOIL SHALL BE PLACED IN EMBANKMENT AREAS, OUTSIDE OF BUILDING PADS, ROADWAYS AND PARKING AREAS. THE CONTRACTOR SHALL SUBCUT CUT AREAS, WHERE TURF IS TO BE ESTABLISHED, TO A DEPTH OF 6 INCHES. RESPREAD TOPSOIL IN AREAS WHERE TURF IS TO BE ESTABLISHED TO A MINIMUM DEPTH OF 6 INCHES.
14. FINISHED GRADING SHALL BE COMPLETED. THE CONTRACTOR SHALL UNIFORMLY GRADE AREAS WITHIN LIMITS OF GRADING, INCLUDING ADJACENT TRANSITION AREAS. PROVIDE A SMOOTH FINISHED SURFACE WITHIN SPECIFIED TOLERANCES, WITH UNIFORM LEVELS OR SLOPES BETWEEN POINTS WHERE ELEVATIONS ARE SHOWN, OR BETWEEN SUCH POINTS AND EXISTING GRADES. AREAS THAT HAVE BEEN FINISH GRADED SHALL BE PROTECTED FROM SUBSEQUENT CONSTRUCTION OPERATIONS, TRAFFIC AND EROSION. REPAIR ALL AREAS THAT HAVE BECOME RUTTED BY TRAFFIC OR ERODED BY WATER OR HAS SETTLED BELOW THE CORRECT GRADE. ALL AREAS DISTURBED BY THE CONTRACTOR'S OPERATIONS SHALL BE RESTORED TO EQUAL OR BETTER THAN ORIGINAL CONDITION OR TO THE REQUIREMENTS OF THE NEW WORK.
15. PRIOR TO PLACEMENT OF THE AGGREGATE BASE, A TEST ROLL WILL BE REQUIRED ON THE STREET AND/OR PARKING AREA SUBGRADE. THE CONTRACTOR SHALL PROVIDE A LOADED TANDEM AXLE TRUCK WITH A GROSS WEIGHT OF 25 TONS. THE TEST ROLLING SHALL BE AT THE DIRECTION OF THE SOILS ENGINEER AND SHALL BE COMPLETED IN AREAS AS DIRECTED BY THE SOILS ENGINEER. THE SOILS ENGINEER SHALL DETERMINE WHICH SECTIONS OF THE STREET OR PARKING AREA ARE UNSTABLE. CORRECTION OF THE SUBGRADE SOILS SHALL BE COMPLETED IN ACCORDANCE WITH THE REQUIREMENTS OF THE SOILS ENGINEER. NO TEST ROLL SHALL OCCUR WITHIN 10' OF ANY UNDERGROUND STORM RETENTION/DETENTION SYSTEMS.
16. AN OSHA-APPROVED QUALIFIED PERSON SHOULD REVIEW THE SOIL CLASSIFICATION PRESENTED IN THE GEOTECHNICAL REPORT IN THE FIELD. EXCAVATIONS MUST COMPLY WITH CURRENT OSHA REQUIREMENTS IN THE CODE OF FEDERAL REGULATIONS PERTAINING TO EXCAVATIONS AND TRENCHES. EXCAVATION SAFETY IS THE RESPONSIBILITY OF THE CONTRACTOR.
17. TOLERANCES
    - 17.1. THE BUILDING SUBGRADE FINISHED SURFACE ELEVATION SHALL NOT VARY BY MORE THAN 0.30 FOOT ABOVE, OR 0.30 FOOT BELOW, THE PRESCRIBED ELEVATION AT ANY POINT WHERE MEASUREMENT IS MADE.
    - 17.2. THE STREET OR PARKING AREA SUBGRADE FINISHED SURFACE ELEVATION SHALL NOT VARY BY MORE THAN 0.05 FOOT ABOVE, OR 0.10 FOOT BELOW, THE PRESCRIBED ELEVATION OF ANY POINT WHERE MEASUREMENT IS MADE.
    - 17.3. AREAS WHICH ARE TO RECEIVE TOPSOIL SHALL BE GRADED TO WITHIN 0.30 FOOT ABOVE OR BELOW THE REQUIRED ELEVATION, UNLESS DIRECTED OTHERWISE BY THE ENGINEER.
    - 17.4. TOPSOIL SHALL BE GRADED TO PLUS OR MINUS 1/2 INCH OF THE SPECIFIED THICKNESS.
    - 17.5. FINISH GRADING FOR HARDSCAPE AREAS IE. PARKING LOTS, CURBS, SIDEWALKS SHALL BE WITHIN 0.05 FEET. ADA AREAS MUST COMPLY WITH REQUIREMENTS ON PLANS AND ADA REGULATIONS. TOLERANCE WITHIN ADA AREAS IS 0.00 FEET DISCUSS ANY DEVIATIONS WITH ENGINEER PRIOR TO CONSTRUCTION. CONTRACTOR IS RESPONSIBLE FOR ANY CURB, SIDEWALK AND/OR PAVEMENT REPLACEMENT THAT DOES NOT MEET TOLERANCE/ADA REQUIREMENTS.
18. MAINTENANCE
    - 18.1. THE CONTRACTOR SHALL PROTECT NEWLY GRADED AREAS FROM TRAFFIC AND EROSION, AND KEEP AREA FREE OF TRASH AND DEBRIS.
    - 18.2. CONTRACTOR SHALL REPAIR AND REESTABLISH GRADES IN SETTLED, ERODED AND RUTTED AREAS TO SPECIFIED TOLERANCES. DURING THE CONSTRUCTION, IF REQUIRED, AND DURING THE WARRANTY PERIOD, ERODED AREAS WHERE TURF IS TO BE ESTABLISHED SHALL BE RESEEDED AND MULCHED.
    - 18.3. WHERE COMPLETED COMPACTED AREAS ARE DISTURBED BY SUBSEQUENT CONSTRUCTION OPERATIONS OR ADVERSE WEATHER, CONTRACTOR SHALL SCARIFY, SURFACE, RESHAPE, AND COMPACT TO REQUIRED DENSITY PRIOR TO FURTHER CONSTRUCTION.

CITY OF FALCON HEIGHTS GRADING NOTES:

1. RESERVED FOR CITY SPECIFIC GRADING NOTES.

EROSION CONTROL NOTES:

SEE SWPPP ON SHEETS SW1.0 - SW1.5

GRADING PLAN LEGEND:

1125	EX. 1' CONTOUR ELEVATION INTERVAL
1137	1.0' CONTOUR ELEVATION INTERVAL
41.26	SPOT GRADE ELEVATION (GUTTER/FLOW LINE UNLESS OTHERWISE NOTED)
891.00 G	SPOT GRADE ELEVATION GUTTER
891.00 TC	SPOT GRADE ELEVATION TOP OF CURB
891.00 BS/TS	SPOT GRADE ELEVATION BOTTOM OF STAIRS/TOP OF STAIRS
891.00 ME	SPOT GRADE ELEVATION MATCH EXISTING
GB	GRADE BREAK - HIGH POINTS
TO	CURB AND GUTTER (T.O = TIP OUT)
EOF=1135.52	EMERGENCY OVERFLOW
	CONSTRUCTION LIMITS

Know what's **below.** Call before you dig.

1" = 20'-0"
10'-0" 0 20'-0"

CivilSite GROUP
Civil Engineering ˚ Surveying ˚ Landscape Architecture
5000 Glenwood Avenue
Golden Valley, MN 55422
civilsitegroup.com 612-615-0060

PRELIMINARY: NOT FOR CONSTRUCTION

PROJECT
FAIRWAY COMMONS APARTMENTS
1644 LARPENTEUR AVE W, FALCON HEIGHTS, MN 55113

OWNER
VELAIR DEVELOPMENT COMPANY
7645 LYNDALE AVE SOUTH #300, MINNEAPOLIS, MN. 55423

I HEREBY CERTIFY THAT THIS PLAN, SPECIFICATION, OR REPORT WAS PREPARED BY ME OR UNDER MY DIRECT SUPERVISION AND THAT I AM A DULY LICENSED PROFESSIONAL ENGINEER UNDER THE LAWS OF THE STATE OF MINNESOTA.

David J. Knaeble
DATE 03/02/2026 LICENSE NO. 48776

ISSUE/SUBMITTAL SUMMARY

DATE	DESCRIPTION
03/02/2026	CITY SUBMITTAL

PROJECT MANAGER	DAVID KNAEBLE
CONTACT NUMBER	612-615-0060
DRAWN BY	BN
REVIEWED BY	DK
PROJECT NUMBER	25503

REVISION SUMMARY

DATE	DESCRIPTION

GRADING PLAN

C3.0

© COPYRIGHT 2026 CIVIL SITE GROUP INC.

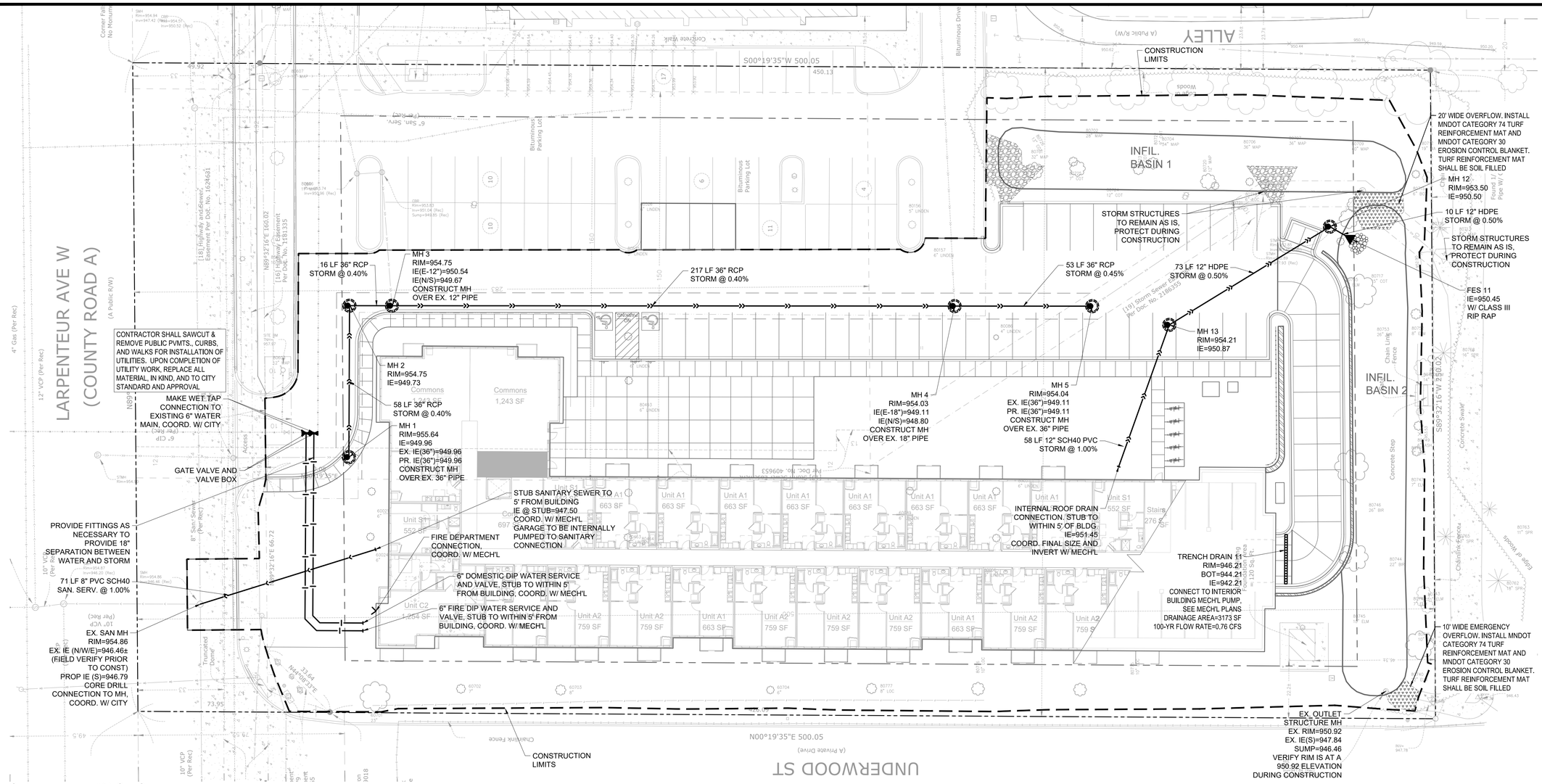

GENERAL UTILITY NOTES:

1. ALL EXISTING UTILITY LOCATIONS SHOWN ARE APPROXIMATE. CONTACT "GOPHER STATE ONE CALL" (651-454-0002 OR 800-252-1166) FOR UTILITY LOCATIONS, 48 HOURS PRIOR TO CONSTRUCTION. THE CONTRACTOR SHALL REPAIR OR REPLACE ANY UTILITIES THAT ARE DAMAGED DURING CONSTRUCTION AT NO COST TO THE OWNER.
2. SEE SITE PLAN FOR HORIZONTAL DIMENSIONS AND LAYOUT.
3. CONTRACTOR SHALL FIELD VERIFY LOCATION AND ELEVATION OF EXISTING UTILITIES AND TOPOGRAPHIC FEATURES PRIOR TO CONSTRUCTION. THE CONTRACTOR SHALL IMMEDIATELY NOTIFY THE ENGINEER OF DISCREPANCIES OR VARIATIONS FROM THE PLANS.
4. CASTINGS SHALL BE SALVAGED FROM STRUCTURE REMOVALS AND RE-USED OR PLACED AT THE DIRECTION OF THE OWNER.
5. PIPE LENGTHS SHOWN ARE FROM CENTER TO CENTER OF STRUCTURE OR TO END OF FLARED END SECTION.
6. UTILITIES CONNECTIONS ON THE PLAN ARE SHOWN TO WITHIN 5' OF THE BUILDING FOOTPRINT. THE CONTRACTOR IS ULTIMATELY RESPONSIBLE FOR THE FINAL CONNECTION TO BUILDING LINES. COORDINATE WITH ARCHITECTURAL AND MECHANICAL PLANS.
7. CATCH BASINS AND MANHOLES IN PAVED AREAS SHALL BE SUMPED 0.04 FEET. ALL CATCH BASINS IN GUTTERS SHALL BE SUMPED 0.15 FEET PER DETAILS. RIM ELEVATIONS SHOWN ON THIS PLAN DO NOT REFLECT SUMPED ELEVATIONS.
8. ALL FIRE HYDRANTS SHALL BE LOCATED 5 FEET BEHIND BACK OF CURB UNLESS OTHERWISE NOTED.
9. HYDRANT TYPE, VALVE, AND CONNECTION SHALL BE IN ACCORDANCE WITH CITY REQUIREMENTS. HYDRANT EXTENSIONS ARE INCIDENTAL.
10. A MINIMUM OF 8 FEET OF COVER IS REQUIRED OVER ALL WATERMAIN, UNLESS OTHERWISE NOTED. EXTRA DEPTH MAY BE REQUIRED TO MAINTAIN A MINIMUM OF 18" VERTICAL SEPARATION TO SANITARY OR STORM SEWER LINES. EXTRA DEPTH WATERMAIN IS INCIDENTAL.
11. A MINIMUM OF 18 INCHES OF VERTICAL SEPARATION AND 10 FEET OF HORIZONTAL SEPARATION IS REQUIRED FOR ALL UTILITIES, UNLESS OTHERWISE NOTED.
12. ALL CONNECTIONS TO EXISTING UTILITIES SHALL BE IN ACCORDANCE WITH CITY STANDARDS AND COORDINATED WITH THE CITY PRIOR TO CONSTRUCTION.
13. CONNECTIONS TO EXISTING STRUCTURES SHALL BE CORE-DRILLED.
14. COORDINATE LOCATIONS AND SIZES OF SERVICE CONNECTIONS WITH THE MECHANICAL DRAWINGS.
15. COORDINATE INSTALLATION AND SCHEDULING OF THE INSTALLATION OF UTILITIES WITH ADJACENT CONTRACTORS AND CITY STAFF.
16. ALL STREET REPAIRS AND PATCHING SHALL BE PERFORMED PER THE REQUIREMENTS OF THE CITY. ALL PAVEMENT CONNECTIONS SHALL BE SAWCUT. ALL TRAFFIC CONTROLS SHALL BE PROVIDED BY THE CONTRACTOR AND SHALL BE ESTABLISHED PER THE REQUIREMENTS OF THE MINNESOTA MANUAL ON UNIFORM TRAFFIC CONTROL DEVICES (MMUTCD) AND THE CITY. THIS SHALL INCLUDE BUT NOT BE LIMITED TO SIGNAGE, BARRICADES, FLASHERS, AND FLAGGERS AS NEEDED. ALL PUBLIC STREETS SHALL BE OPEN TO TRAFFIC AT ALL TIMES. NO ROAD CLOSURES SHALL BE PERMITTED WITHOUT APPROVAL BY THE CITY.
17. ALL STRUCTURES, PUBLIC AND PRIVATE, SHALL BE ADJUSTED TO PROPOSED GRADES WHERE REQUIRED. THE REQUIREMENTS OF ALL OWNERS MUST BE COMPLIED WITH. STRUCTURES BEING RESET TO PAVED AREAS MUST MEET OWNERS REQUIREMENTS FOR TRAFFIC LOADING.
18. CONTRACTOR SHALL COORDINATE ALL WORK WITH PRIVATE UTILITY COMPANIES.
19. CONTRACTOR SHALL COORDINATE CONNECTION OF IRRIGATION SERVICE TO UTILITIES. COORDINATE THE INSTALLATION OF IRRIGATION SLEEVES NECESSARY AS TO NOT IMPACT INSTALLATION OF UTILITIES.
20. CONTRACTOR SHALL MAINTAIN AS-BUILT PLANS THROUGHOUT CONSTRUCTION AND SUBMIT THESE PLANS TO ENGINEER UPON COMPLETION OF WORK.
21. FOR ALL SITES LOCATED IN CLAY SOIL AREAS, DRAIN TILE MUST BE INSTALLED AT ALL LOW POINT CATCH BASINS 25' IN EACH DIRECTION. SEE PLAN AND DETAIL. INSTALL LOW POINT DRAIN TILE PER PLANS AND GEOTECHNICAL REPORT RECOMMENDATIONS AND REQUIREMENTS.
22. AN OSHA-APPROVED QUALIFIED PERSON SHOULD REVIEW THE SOIL CLASSIFICATION PRESENTED IN THE GEOTECHNICAL REPORT IN THE FIELD. EXCAVATIONS MUST COMPLY WITH CURRENT OSHA REQUIREMENTS IN THE CODE OF FEDERAL REGULATIONS PERTAINING TO EXCAVATIONS AND TRENCHES. EXCAVATION SAFETY IS THE RESPONSIBILITY OF THE CONTRACTOR.

CITY OF FALCON HEIGHTS UTILITY NOTES:

1. RESERVED FOR CITY SPECIFIC UTILITY NOTES.

UTILITY PLAN LEGEND:

- CATCH BASIN
- MANHOLE
- GATE VALVE AND VALVE BOX
- PROPOSED FIRE HYDRANT
- DT — DT — DRAINTILE
- WATER MAIN
- SANITARY SEWER
- STORM SEWER
- FES AND RIP RAP
- TRENCH DRAIN
- CONSTRUCTION LIMITS

Know what's below. Call before you dig.

1" = 20'-0"
10'-0" 0 20'-0"

CivilSite GROUP
Civil Engineering ˚ Surveying ˚ Landscape Architecture
5000 Glenwood Avenue
Golden Valley, MN 55422
civilsitegroup.com 612-615-0060

PRELIMINARY: NOT FOR CONSTRUCTION

PROJECT
FAIRWAY COMMONS APARTMENTS
1644 LARPENTEUR AVE W, FALCON HEIGHTS, MN 55113

OWNER
VELAIR DEVELOPMENT COMPANY
7645 LYNDALE AVE SOUTH #300, MINNEAPOLIS, MN. 55423

I HEREBY CERTIFY THAT THIS PLAN, SPECIFICATION, OR REPORT WAS PREPARED BY ME OR UNDER MY DIRECT SUPERVISION AND THAT I AM A DULY LICENSED PROFESSIONAL ENGINEER UNDER THE LAWS OF THE STATE OF MINNESOTA.

David J. Knaeble
DATE 03/02/2026 LICENSE NO. 48776

ISSUE/SUBMITTAL SUMMARY

DATE	DESCRIPTION
03/02/2026	CITY SUBMITTAL

PROJECT MANAGER	DAVID KNAEBLE
CONTACT NUMBER	612-615-0060
DRAWN BY	BN
REVIEWED BY	DK
PROJECT NUMBER	25503

REVISION SUMMARY

DATE	DESCRIPTION

UTILITY PLAN

C4.0

© COPYRIGHT 2026 CIVIL SITE GROUP INC.

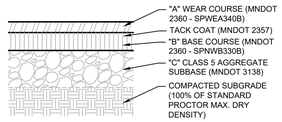

PAVEMENT DESIGN

TYPE	WEAR (A)	BASE (B)	AGG.(C)
LIGHT DUTY	1.5"	1.5"	6.0"
HEAVY DUTY	2.0"	2.0"	8.0"

NOTE:
IF NO DESIGN IS DEFINED IN ABOVE CHART, SEE GEOTECH REPORT FOR FINAL PAVEMENT SECTION.
IF DESIGN IS DEFINED IN ABOVE CHART, IT SHOULD BE CONSIDERED FOR BIDDING PURPOSES ONLY. REFER TO GEOTECH FOR FINAL PAVEMENT SECTION.

1 BITUMINOUS PAVEMENT - ALL TYPES
N T S

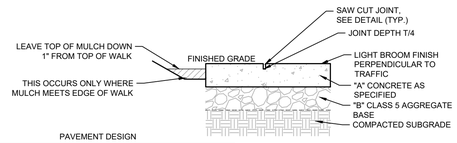

PAVEMENT DESIGN

TYPE	CONC. (A)	AGG.(B)
WALKS	5"	6"
CONC. PVMT.	7"	6"

CURING:
1. APPLY CURING COMPOUNDS IMMEDIATELY UPON FINAL FINISHING OF CONC. SURFACE IN ACCORDANCE WITH MANUFACTURER'S INSTRUCTION AND THE SPECIFICATIONS BELOW.
2. ALL CONC. SURFACES SHALL HAVE CURING COMPOUNDS ALLIED PER ASTM C-1315. AT 200 S.F. PER GAL.
3. ALL CURING COMPOUNDS SHALL BE TYPE 1 (CLEAR) AND CONTAIN ACRYLIC BASED CLASS B RESTRICTED RESIN SOLIDS.

NOTES:
1. INSTALLATION SHALL BE CERTIFIED AND IN ACCORDANCE TO AN ON-SITE A.C.I. TECHNICIAN AS SPECIFIED.
2. SEE GEO-TECHNICAL RECOMMENDATIONS FOR GROSS WEIGHT REQUIREMENTS.
3. IF NO DESIGN IS DEFINED IN CHART, SEE GEOTECH REPORT FOR FINAL PAVEMENT SECTION.
4. IF DESIGN IS DEFINED IN CHART, IT SHOULD BE CONSIDERED FOR BIDDING PURPOSES ONLY. REFER TO GEOTECH FOR FINAL PAVEMENT SECTION.

2 CONCRETE PVMT./WALK/PAD- NO FIBER
N T S (PRIVATE PROPERTY)

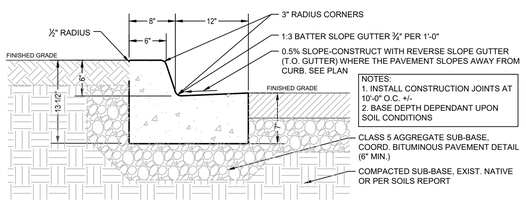

NOTES:
1. INSTALL CONSTRUCTION JOINTS AT 10'-0" O.C. +/-
2. BASE DEPTH DEPENDANT UPON SOIL CONDITIONS

3 B-612 CONCRETE CURB AND GUTTER
N T S

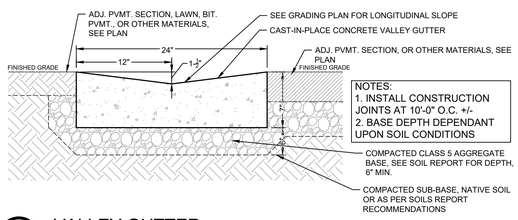

NOTES:
1. INSTALL CONSTRUCTION JOINTS AT 10'-0" O.C. +/-
2. BASE DEPTH DEPENDANT UPON SOIL CONDITIONS

4 VALLEY GUTTER
N T S

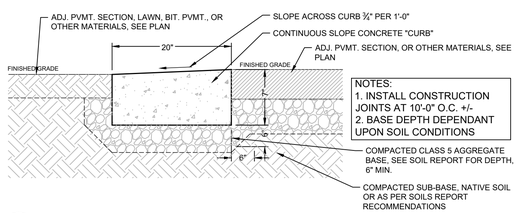

NOTES:
1. INSTALL CONSTRUCTION JOINTS AT 10'-0" O.C. +/-
2. BASE DEPTH DEPENDANT UPON SOIL CONDITIONS

5 RIBBON CURB
N T S

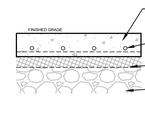

NOTES:
1. COORDINATE SNOW MELT SYSTEM WITH MECHANICAL AND ELECTRICAL ENGINEERS.
2. COORDINATE ALL WIRING, PIPING, AND CONDUITS WITH GRADING AND PAVING CONTRACTORS.
3. SHOP DRAWINGS OF SNOW MELT SYSTEM ARE REQUIRED.
4. ANY REVISIONS TO SYSTEM SHALL BE PRESENTED AND APPROVED PRIOR TO CONSTRUCTION.

6 HEATED CONCRETE PVMT.
N T S (PRIVATE PROPERTY)

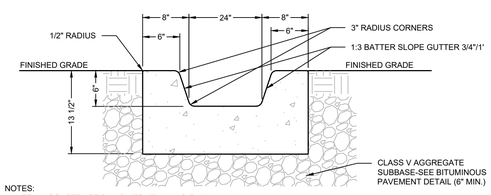

NOTES:
1. INSTALL CONSTRUCTION JOINTS AT 10'-0" O.C. +/-
2. BASE DEPTH DEPENDANT UPON SOIL CONDITIONS

7 CONCRETE 2.0' CURB CUT
N T S

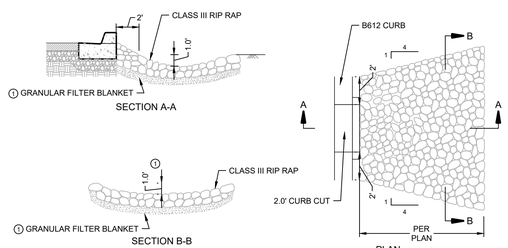

NOTES:
① THE CONTRACTOR, AS AN OPTION, MAY SUBSTITUTE A GEOTEXTILE FABRIC, MNDOT SPEC. 3733, FOR THE GRANULAR FILTER BLANKET UNLESS OTHERWISE SPECIFIED IN THE PLANS. THE FABRIC SHOULD COVER THE AREA OF THE RIPRAP AND EXTEND TO BACK OF CURB.

8 RIPRAP @ 2.0' CURB CUT
N T S

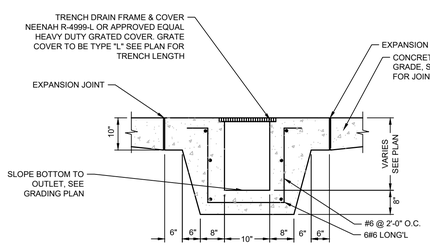

9 TRENCH DRAIN
N T S

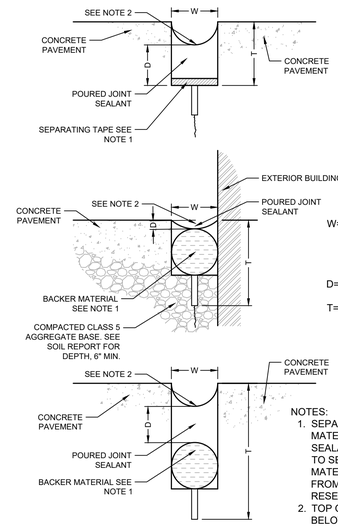

W= WIDTH OF SEALANT RESERVOIR
1/2" MINIMUN
5/8" MAXIMUM
EXCEPT FOR 3/4" EXPANSION JOINTS
D= DEPTH OF SEALANT
1.0 TO 1.5 TIMES W
T= DEPTH OF INTIAL SAWCUT, 1/4 OF THE SLAB THINKNESS FOR PAVEMENT LESS THAN 12"

NOTES:
1. SEPARATING TAPE OR BACKER MATERIAL REQUIRED TO PREVENT JOINT SEALANT FROM FLOWING INTO SAWCUT, TO SEPARATE NONCOMPATIBLE MATERIALS AND TO PREVENT SEALANT FROM BONDING TO BOTTOM OF RESERVOIR.
2. TOP OF SEALANT WILL BE 1/8" TO 1/4" BELOW TOP OF PAVEMENT.

10 EXPANSION JOINT SEALANT DETAILS
N T S

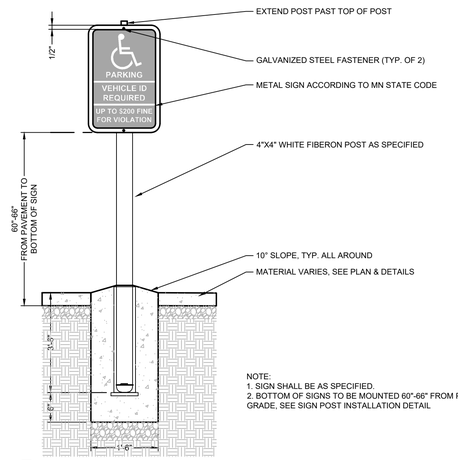

NOTE:
1. SIGN SHALL BE AS SPECIFIED.
2. BOTTOM OF SIGNS TO BE MOUNTED 60"-66" FROM PARKING GRADE, SEE SIGN POST INSTALLATION DETAIL

11 ACCESSIBLE SIGN AND POST
N T S

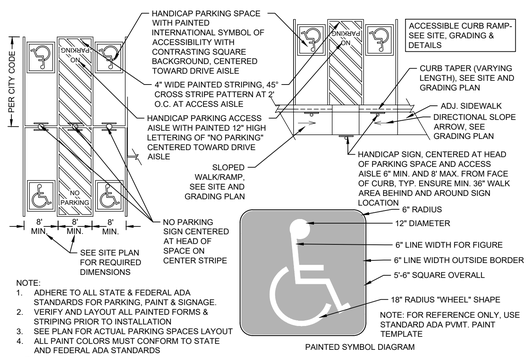

NOTE:
1. ADHERE TO ALL STATE & FEDERAL ADA STANDARDS FOR PARKING, PAINT & SIGNAGE.
2. VERIFY AND LAYOUT ALL PAINTED FORMS & STRIPING PRIOR TO INSTALLATION
3. SEE PLAN FOR ACTUAL PARKING SPACES LAYOUT
4. ALL PAINT COLORS MUST CONFORM TO STATE AND FEDERAL ADA STANDARDS

12 ACCESSIBLE PARKING PAVEMENT MARKING
N T S

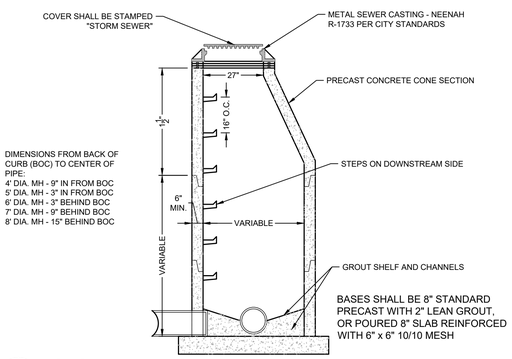

DIMENSIONS FROM BACK OF CURB (BOC) TO CENTER OF PIPE:
4' DIA. MH - 9" IN FROM BOC
5' DIA. MH - 3" IN FROM BOC
6' DIA. MH - 3" BEHIND BOC
7' DIA. MH - 9" BEHIND BOC
8' DIA. MH - 15" BEHIND BOC

13 STORM MANHOLE
N T S

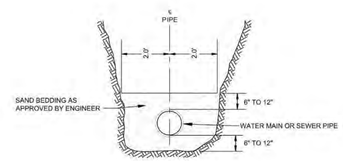

DESIGN:	DATE:	ROSEVILLE ENGINEERING DEPARTMENT	PLATE NUMBER
DRAWN:		PIPE BEDDING	BED-1
REVISIONS			

PIPE BEDDING.dwg

CivilSite GROUP
Civil Engineering * Surveying * Landscape Architecture
5000 Glenwood Avenue
Golden Valley, MN 55422
civilsitegroup.com 612-615-0060

PRELIMINARY: NOT FOR CONSTRUCTION

PROJECT
FAIRWAY COMMONS APARTMENTS
1644 LARPENTEUR AVE W, FALCON HEIGHTS, MN 55113

OWNER
VELAIR DEVELOPMENT COMPANY
7645 LYNDALE AVE SOUTH #300, MINNEAPOLIS, MN. 55423

I HEREBY CERTIFY THAT THIS PLAN, SPECIFICATION, OR REPORT WAS PREPARED BY ME OR UNDER MY DIRECT SUPERVISION AND THAT I AM A DULY LICENSED PROFESSIONAL ENGINEER UNDER THE LAWS OF THE STATE OF MINNESOTA.

David J. Knaeble
DATE 03/02/2026 LICENSE NO. 48776

ISSUE/SUBMITTAL SUMMARY

DATE	DESCRIPTION
03/02/2026	CITY SUBMITTAL

PROJECT MANAGER	DAVID KNAEBLE
CONTACT NUMBER	612-615-0060
DRAWN BY	BN
REVIEWED BY	DK
PROJECT NUMBER	25503

REVISION SUMMARY

DATE	DESCRIPTION

CIVIL DETAILS

C5.0

© COPYRIGHT 2026 CIVIL SITE GROUP INC.

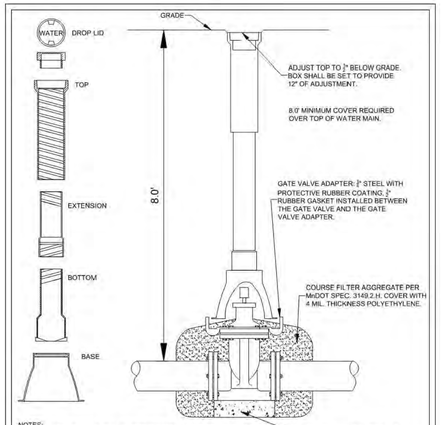

NOTES:
1. ALL GATE VALVES SHALL HAVE MECHANICAL JOINT OR ALPHA RESTRAINED JOINT ENDS CONFORMING TO AWWA C509 STANDARDS.
2. VALVES SHALL BE LEFT HAND OPENING (COUNTER-CLOCKWISE).
3. GATE VALVE ADAPTER SHALL BE MANUFACTURED BY ADAPTOR INC., OR APPROVED EQUAL.
4. GATE VALVE AND BOXES SHALL BE TYLER SERIES 6860, STAR PIPE PRODUCTS SERIES, MUELLER NO. H-10357, OR APPROVED EQUAL.
5. ALL BOLTS INCLUDING T-BOLTS SHALL BE COR-BLU.
6. GATE VALVE AND BOX SHALL BE STRAIGHT, ALLOWING A 4" PVC PIPE TO SLIDE DOWN THE BOX AND OVER THE GATE OPERATING NUT.

DESIGN:	DATE:	ROSEVILLE ENGINEERING DEPARTMENT	PLATE NUMBER
DRAWN: DRT		GATE VALVE AND BOX INSTALLATION	W-5
REVISIONS 02-03-2022			

GATE VALVE AND BOX INSTALLATION.DWG

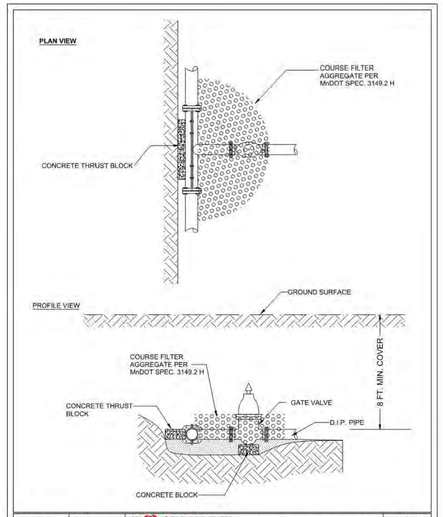

DESIGN:	DATE:	ROSEVILLE ENGINEERING DEPARTMENT	PLATE NUMBER
DRAWN:		WATER MAIN WET TAP	W-6
REVISIONS 02-08-2018			

WATER MAIN WET TAP.DWG

BUTTRESS DIMENSIONS							
PIPE	22½° BEND		45° BEND		90° BEND		
SIZE	B1	D1	B1	D1	B1	D1	
6"	--	--	--	--	2'-1"	1'-6"	
8"	--	--	--	--	2'-8"	2'-0"	
12"	3'-10"	8'-10"	5'-4"	2'-0"	4'-9"	2'-6"	
16"	5'-2"	7'-2"	5'-10"	1'-6"	6'-2"	2'-6"	
20"	3'-6"	2'-8"	5'-6"	1'-4"	6'-4"	4'-0"	
24"	4'-4"	3'-0"	6'-10"	1'-0"	8'-0"	3'-0"	
30"	--	--	8'-3"	1'-6"	9'-7"	3'-6"	

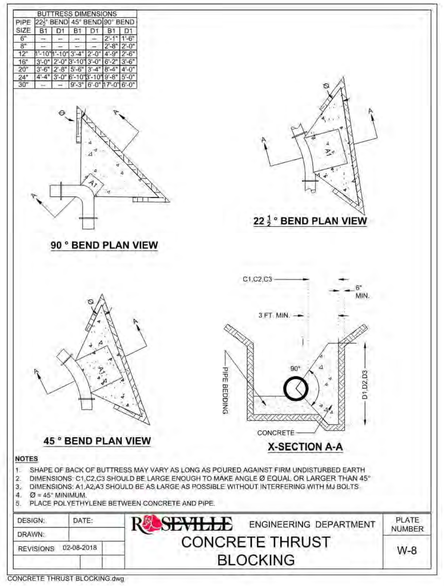

NOTES
1. SHAPE OF BACK OF BUTTRESS MAY VARY AS LONG AS POURED AGAINST FIRM UNDISTURBED EARTH
2. DIMENSIONS C1,C2,C3 SHOULD BE LARGE ENOUGH TO MAKE ANGLE Ø EQUAL OR LARGER THAN 45°
3. DIMENSIONS: A1,A2,A3 SHOULD BE AS LARGE AS POSSIBLE WITHOUT INTERFERING WITH MJ BOLTS.
4. Ø = 45° MINIMUM.
5. PLACE POLYETHYLENE BETWEEN CONCRETE AND PIPE.

DESIGN:	DATE:	ROSEVILLE ENGINEERING DEPARTMENT	PLATE NUMBER
DRAWN:		CONCRETE THRUST BLOCKING	W-8
REVISIONS 02-08-2018			

CONCRETE THRUST BLOCKING.dwg

NOTES:
1. INSTALL TRASH GUARD ON ALL FLARED END SECTIONS 24" DIA. AND LARGER.
2. UNLESS OTHER FORM OF DISSIPATION IS REQUIRED, GRANITE RIPRAP WILL BE PLACED AROUND SIDES AND OVER TOP OF FLARED END SECTION.
3. ONE CUBIC YARD IS APPROXIMATELY 1.4 TONS.

MINIMUM RIPRAP REQUIRED			
PIPE DIA. (IN.)	LENGTH (FT.)	QUANTITY (CY.)	CLASS
12	8	5	3
15	8	5	3
18	10	6	3
24	12	8	3
30	14	12	3
36	16	14	3
42	18	22	4
48	20	26	4
>48	22-28	35-40	4

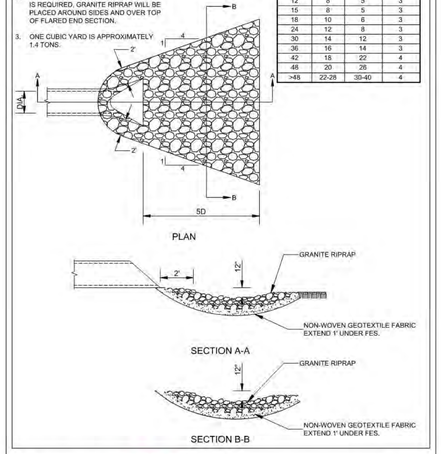

DESIGN:	DATE: 12/2/15	ROSEVILLE ENGINEERING DEPARTMENT	PLATE NUMBER
DRAWN: DRT		RIPRAP PLACEMENT AT FLARED END SECTIONS	ST-5
REVISIONS			

RIPRAP.dwg

NOTES:
1. INSTALL TRASH GUARD ON ALL FLARED END SECTIONS 24" DIA. AND LARGER.
2. UNLESS OTHER FORM OF DISSIPATION IS REQUIRED, GRANITE RIPRAP WILL BE PLACED AROUND SIDES AND OVER TOP OF FLARED END SECTION. SEE DETAIL PLATE ST-13.

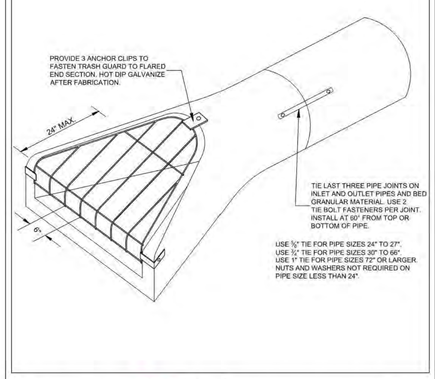

DESIGN:	DATE: 12/2/15	ROSEVILLE ENGINEERING DEPARTMENT	PLATE NUMBER
DRAWN: DRT		FLARED END SECTION	ST-9
REVISIONS			

FLARED END SECTION.dwg

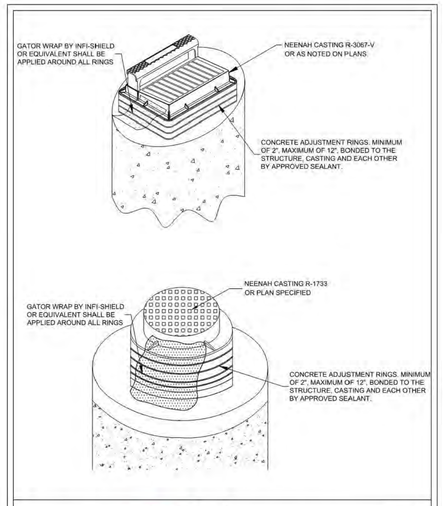

DESIGN:	DATE: 3/08/18	ROSEVILLE ENGINEERING DEPARTMENT	PLATE NUMBER
DRAWN:		CATCH BASIN AND MANHOLE ADJUSTMENT RINGS	ST-22
REVISIONS 2/17/22 DRT			

CB AND MH ADJ RINGS.DWG

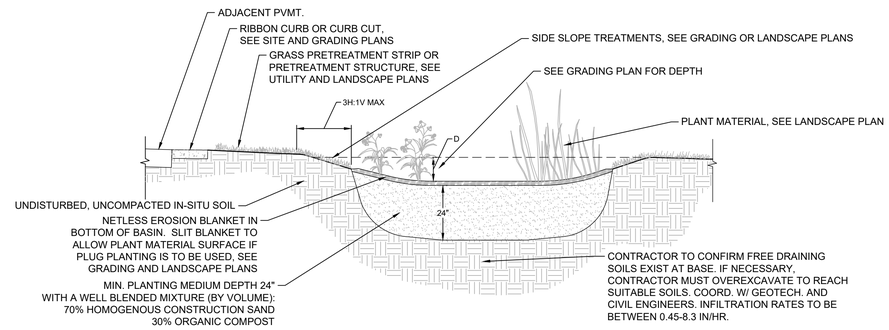

CONSTRUCTION SEQUENCING

1. INSTALL SILT FENCE AND/OR OR OTHER APPROPRIATE TEMPORARY EROSION CONTROL DEVICES TO PREVENT SEDIMENT FROM LEAVING OR ENTERING THE PRACTICE DURING CONSTRUCTION.
2. ALL DOWN-GRADIENT PERIMETER SEDIMENT CONTROL BMP'S MUST BE IN PLACE BEFORE ANY UP-GRADIENT LAND DISTURBING ACTIVITY BEGINS.
3. PERFORM CONTINUOUS INSPECTIONS OF EROSION CONTROL PRACTICES.
4. AFTER SUBGRADE EXCAVATION BUT PRIOR TO CONSTRUCTION/INSTALLATION OF THE STORMWATER BMP, CONTRACTOR SHALL HAVE GEOTECHNICAL ENGINEER PERFORM DOUBLE-RING INFILTROMETER TEST. TEST SHALL OCCUR AT BOTTOM OF SUBGRADE ELEVATION OF STORMWATER BMP (CHAMBERS, INFILTRATION BASINS ETC.) AT LOCATION(S) DETERMINED BY THE GEOTECHNICAL ENGINEER ON SITE. REPORT INFILTRATION RATES OF SOILS (NATIVE OR IMPORTED) TO CIVIL ENGINEER PRIOR TO ANY INSTALLATION RELATED TO THE BMP. TESTING SHOULD YIELD RESULTS OF APPROXIMATELY TWICE THE DESIGN RATE, PROVIDING A SAFETY FACTOR CONSISTENT WITH SECTION 16.11 OF THE NPDES CONSTRUCTION STORMWATER PERMIT. IF TEST RESULTS EXCEED 8.5 INCHES PER HOUR, SECTION 16.16 REQUIRES THAT SOILS BE AMENDED TO SLOW THE INFILTRATION RATE BELOW 8.3 INCHES PER HOUR.
5. POST CONSTRUCTION TESTING OF THE INFILTRATION RATE AND DRAWDOWN PERIOD WILL BE REQUIRED. POST CONSTRUCTION TESTING SHOULD YIELD RESULTS OF APPROXIMATELY TWICE THE DESIGN RATE, PROVIDING A SAFETY FACTOR CONSISTENT WITH SECTION 16.11 OF THE NPDES CONSTRUCTION STORMWATER PERMIT. IF TEST RESULTS EXCEED 8.5 INCHES PER HOUR, SECTION 16.16 REQUIRES THAT SOILS BE AMENDED TO SLOW THE INFILTRATION RATE BELOW 8.3 INCHES PER HOUR. INSTALL UTILITIES (WATER, SANITARY SEWER, ELECTRIC, PHONE, FIBER OPTIC, ETC) PRIOR TO THE STORMWATER SYSTEM.
6. ROUGH GRADE THE SITE. IF BIORETENTION AREAS ARE BEING USED AS TEMPORARY SEDIMENT BASINS, LEAVE A MINIMUM OF 1 FEET OF COVER OVER THE PRACTICE TO PROTECT THE UNDERLYING SOILS FROM CLOGGING.
7. PERFORM ALL OTHER SITE IMPROVEMENTS.
8. PLANT ALL AREAS AFTER DISTURBANCE.
9. CONSTRUCT BIORETENTION DEVICE UPON STABILIZATION OF CONTRIBUTING DRAINAGE AREA.
10. IMPLEMENT TEMPORARY AND PERMANENT EROSION CONTROL PRACTICES.
11. PLANT AND/OR ROCK MULCH BIORETENTION DEVICE.
12. REMOVE TEMPORARY EROSION CONTROL DEVICES AFTER THE CONTRIBUTING DRAINAGE AREA IS ADEQUATELY VEGETATED.

GENERAL NOTES
1. IN THE EVENT THAT SEDIMENT IS INTRODUCED INTO THE BMP DURING OR IMMEDIATELY FOLLOWING EXCAVATION, THIS MATERIAL SHALL BE REMOVED FROM THE PRACTICE PRIOR TO CONTINUING CONSTRUCTION.
2. GRADING OF BIORETENTION DEVICES SHALL BE ACCOMPLISHED USING LOW-COMPACTION EARTH-MOVING EQUIPMENT TO PREVENT COMPACTION OF UNDERLYING SOILS.
3. ALL SUB MATERIALS BELOW THE SPECIFIED BIORETENTION DEPTH (ELEVATION) SHALL BE UNDISTURBED, UNLESS OTHERWISE NOTED.

3 BIO-INFILTRATION BASIN (RAIN GARDEN - TYP.)
N T S

CivilSite GROUP
Civil Engineering ˚ Surveying ˚ Landscape Architecture
5000 Glenwood Avenue
Golden Valley, MN 55422
civilsitegroup.com 612-615-0060

PRELIMINARY: NOT FOR CONSTRUCTION

PROJECT
FAIRWAY COMMONS APARTMENTS
1644 LARPENTEUR AVE W, FALCON HEIGHTS, MN 55113

OWNER
VELAIR DEVELOPMENT COMPANY
7645 LYNDALE AVE SOUTH #300, MINNEAPOLIS, MN, 55423

I HEREBY CERTIFY THAT THIS PLAN, SPECIFICATION, OR REPORT WAS PREPARED BY ME OR UNDER MY DIRECT SUPERVISION AND THAT I AM A DULY LICENSED PROFESSIONAL ENGINEER UNDER THE LAWS OF THE STATE OF MINNESOTA.

David J. Knaeble
DATE 03/02/2026 LICENSE NO. 48776

ISSUE/SUBMITTAL SUMMARY

DATE	DESCRIPTION
03/02/2026	CITY SUBMITTAL

PROJECT MANAGER	DAVID KNAEBLE
CONTACT NUMBER	612-615-0060
DRAWN BY	BN
REVIEWED BY	DK
PROJECT NUMBER	25503

REVISION SUMMARY

DATE	DESCRIPTION

CIVIL DETAILS

C5.1

© COPYRIGHT 2026 CIVIL SITE GROUP INC.

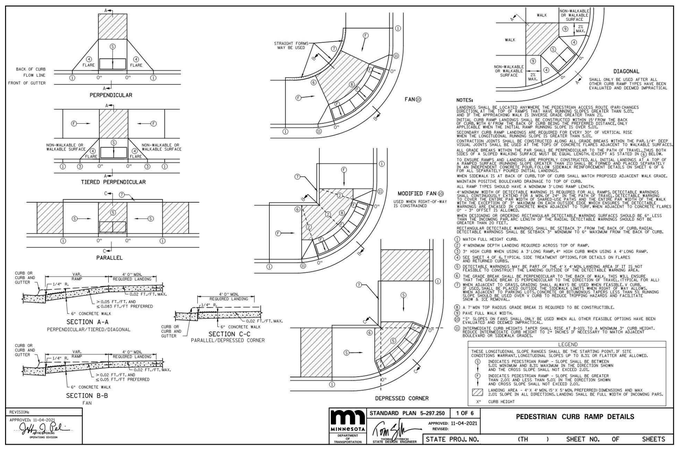

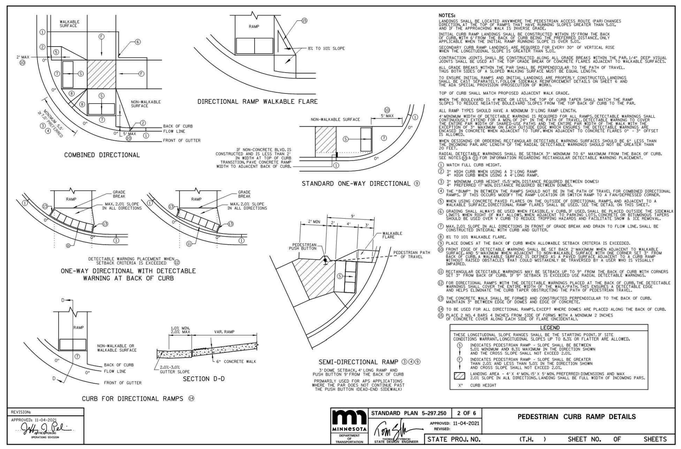

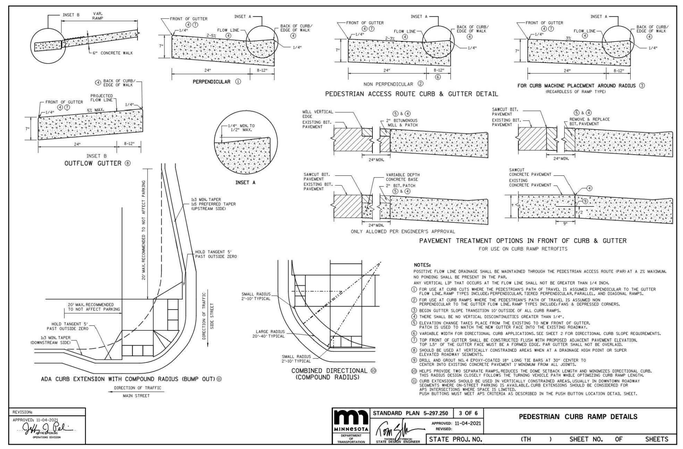

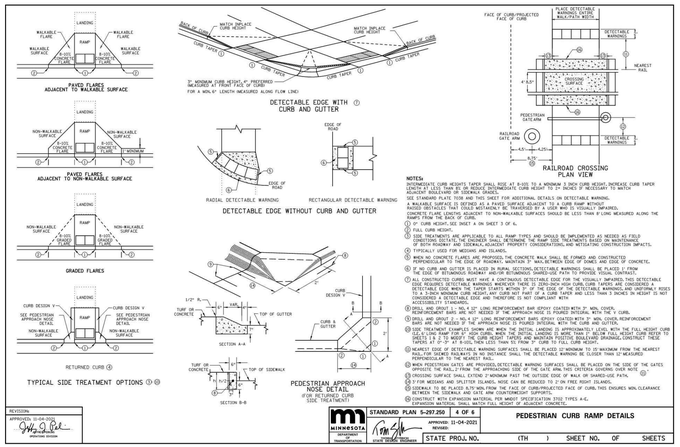

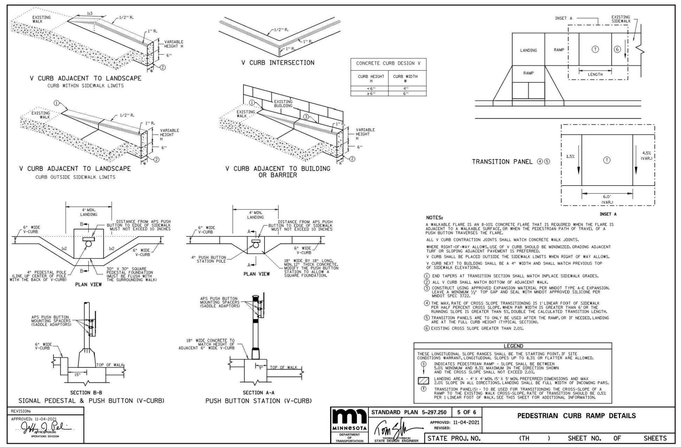

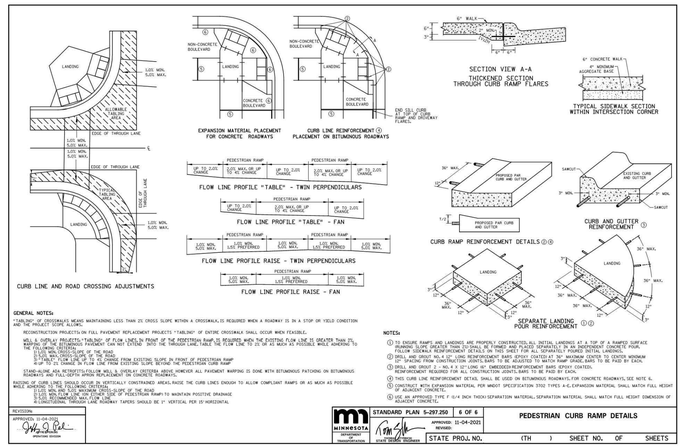

CivilSite GROUP
Civil Engineering ˚ Surveying ˚ Landscape Architecture
5000 Glenwood Avenue
Golden Valley, MN 55422
civilsitegroup.com 612-615-0060

PRELIMINARY: NOT FOR CONSTRUCTION

PROJECT
FAIRWAY COMMONS APARTMENTS
1644 LARPENTEUR AVE W, FALCON HEIGHTS, MN 55113

OWNER
VELAIR DEVELOPMENT COMPANY
7645 LYNDALE AVE SOUTH #300, MINNEAPOLIS, MN. 55423

I HEREBY CERTIFY THAT THIS PLAN, SPECIFICATION, OR REPORT WAS PREPARED BY ME OR UNDER MY DIRECT SUPERVISION AND THAT I AM A DULY LICENSED PROFESSIONAL ENGINEER UNDER THE LAWS OF THE STATE OF MINNESOTA.

David J. Knaeble

David J. Knaeble
DATE 03/02/2026 LICENSE NO. 48776

ISSUE/SUBMITTAL SUMMARY

DATE	DESCRIPTION
03/02/2026	CITY SUBMITTAL

PROJECT MANAGER	DAVID KNAEBLE
CONTACT NUMBER	612-615-0060
DRAWN BY	BN
REVIEWED BY	DK
PROJECT NUMBER	25503

REVISION SUMMARY

DATE	DESCRIPTION

CIVIL DETAILS

C5.2

© COPYRIGHT 2026 CIVIL SITE GROUP INC.

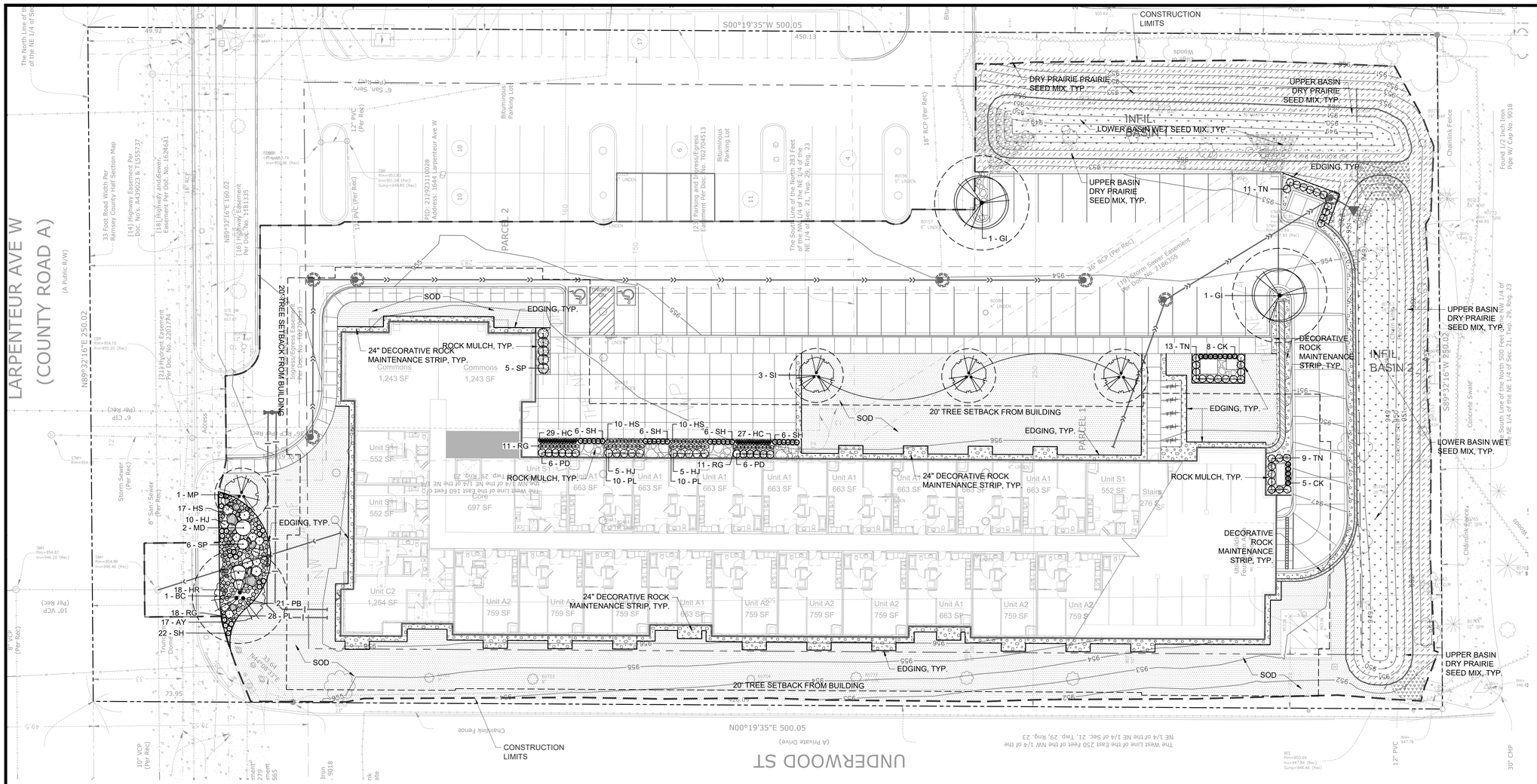

LANDSCAPE NOTES:

1. ALL EXISTING UTILITY LOCATIONS SHOWN ARE APPROXIMATE. CONTACT "GOPHER STATE ONE CALL" (651-454-0002 OR 800-252-1166) FOR UTILITY LOCATIONS, 48 HOURS PRIOR TO CONSTRUCTION. THE CONTRACTOR SHALL REPAIR OR REPLACE ANY UTILITIES THAT ARE DAMAGED DURING CONSTRUCTION AT NO COST TO THE OWNER.
2. REFERENCE MULCH SCHEDULE FOR MULCH MATERIALS AND LOCATIONS.
3. ALL TREES SHALL BE MULCHED WITH ROCK MULCH TO OUTER EDGE OF SAUCER OR TO EDGE OF PLANTING BED, IF APPLICABLE. ALL MULCH SHALL BE KEPT WITHIN A MINIMUM OF 2" FROM TREE TRUNK.
4. IF SHOWN ON PLAN, RANDOM SIZED LIMESTONE BOULDERS COLOR AND SIZE TO COMPLIMENT NEW LANDSCAPING. OWNER TO APPROVE BOULDER SAMPLES PRIOR TO INSTALLATION.
5. PLANT MATERIALS SHALL CONFORM WITH THE AMERICAN ASSOCIATION OF NURSERYMEN STANDARDS AND SHALL BE OF HARDY STOCK, FREE FROM DISEASE, DAMAGE AND DISFIGURATION. CONTRACTOR IS RESPONSIBLE FOR MAINTAINING PLUMPNESS OF PLANT MATERIAL FOR DURATION OF ACCEPTANCE PERIOD.
6. UPON DISCOVERY OF A DISCREPANCY BETWEEN THE QUANTITY OF PLANTS SHOWN ON THE SCHEDULE AND THE QUANTITY SHOWN ON THE PLAN, THE PLAN SHALL GOVERN.
7. CONDITION OF VEGETATION SHALL BE MONITORED BY THE LANDSCAPE ARCHITECT THROUGHOUT THE DURATION OF THE CONTRACT. LANDSCAPE MATERIALS PART OF THE CONTRACT SHALL BE WARRANTED FOR TWO (2) FULL GROWING SEASONS FROM SUBSTANTIAL COMPLETION DATE.
8. ALL AREAS DISTURBED BY CONSTRUCTION ACTIVITIES SHALL RECEIVE 6" LAYER TOPSOIL AND SOD AS SPECIFIED UNLESS OTHERWISE NOTED ON THE DRAWINGS.
9. COORDINATE LOCATION OF VEGETATION WITH UNDERGROUND AND OVERHEAD UTILITIES, LIGHTING FIXTURES, DOORS AND WINDOWS. CONTRACTOR SHALL STAKE IN THE FIELD FINAL LOCATION OF TREES AND SHRUBS FOR REVIEW AND APPROVAL BY THE LANDSCAPE ARCHITECT PRIOR TO INSTALLATION.
10. ALL PLANT MATERIALS SHALL BE WATERED AND MAINTAINED UNTIL ACCEPTANCE.
11. REPAIR AT NO COST TO OWNER ALL DAMAGE RESULTING FROM LANDSCAPE CONTRACTOR'S ACTIVITIES.
12. SWEEP AND MAINTAIN ALL PAVED SURFACES FREE OF DEBRIS GENERATED FROM LANDSCAPE CONTRACTOR'S ACTIVITIES.
13. PROVIDE SITE WIDE IRRIGATION SYSTEM DESIGN AND INSTALLATION. SYSTEM SHALL BE FULLY PROGRAMMABLE AND CAPABLE OF ALTERNATE DATE WATERING. THE SYSTEM SHALL PROVIDE HEAD TO HEAD OR DRIP COVERAGE AND BE CAPABLE OF DELIVERING ONE INCH OF PRECIPITATION PER WEEK. SYSTEM SHALL EXTEND INTO THE PUBLIC RIGHT-OF-WAY TO THE EDGE OF PAVEMENT/BACK OF CURB.
14. CONTRACTOR SHALL SECURE APPROVAL OF PROPOSED IRRIGATION SYSTEM INCLUDING PRICING FROM OWNER, PRIOR TO INSTALLATION.

PLANTING SEASON SCHEDULE

SEASON	CONIFEROUS	DECIDUOUS	REMARKS
SPRING PLANTING	APRIL 15 - JUNE 15	APRIL 15 - JUNE 15	
FALL PLANTING	AUGUST 21 - SEPTEMBER 30	AUGUST 15 - NOVEMBER 15	
NOTE: ADJUSTMENTS TO PLANTING DATES MUST BE APPROVED IN WRITING BY THE LANDSCAPE ARCHITECT.			

POLLINATOR SAFE PLANT MATERIAL:

1. THE CONTRACTOR SHALL PROVIDE ONLY PLANT MATERIAL FREE OF NEONICOTINOID BASED INSECTICIDES AND/OR TREATMENTS OF ANY KIND, INCLUDING BY NOT LIMITED TO IMIDACLOPRID (CONFIDOR, ADMIRE, GAUCHO, ADVOCATE), THIAMETHOXAM (ACTARA, PLATINUM, CRUISER), CLOTHIANIDIN (PONCHO, DANTOSU, DANTOP), ACETAMIPRID (MOSPILAN, ASSAIL, CHIPCOTRISTAR), THIACLOPRID (CALYPSO), DINOTEFURAN (STARKLE, SAFARI, VENOM), AND NITENPYRAM (CAPSTAR, GUARDIAN).
2. CONTRACTOR SHALL CERTIFY, THROUGH SUPPLIERS POLICY STATEMENT OR AFFIDAVIT, THAT NO NEONICOTINOID BASED INSECTICIDES HAVE BEEN USED ON SITE OR DIRECTLY ADJACENT TO THE GROWING OR STORAGE PLOTS OF THE SUPPLIED PLANT MATERIAL, INCLUDING THE PLANTING OF AGRICULTURAL (OR OTHER) SEED TREATED WITH NEONICS..

MULCH SCHEDULE

AREA	MULCH TYPE	EDGING	FABRIC	REMARKS
TREE RINGS	4" DEPTH, DECORATIVE ROCK	YES	NO	SEE DETAIL, SHEET L1.1
PLANTING BEDS	4" DEPTH, DECORATIVE ROCK	YES	NO	SEE DETAIL, SHEET L1.1
MAINT. STRIP AT BUILDING FOUNDATION	3" DEPTH, 1.5" DECORATIVE ROCK	YES	YES	SEE DETAIL, SHEET L1.1
PLAYGROUND MULCH	N/A	N/A	N/A	
DOG PARK MULCH	N/A	N/A	N/A	
NOTE: COORDINATE ALL MULCH AND PLANTING BED MATERIAL PRIOR TO INSTALLATION, PROVIDE SAMPLES AND SHOP DRAWINGS/PHOTOS/DATA SHEETS OF ALL MATERIALS				

LANDSCAPE PLAN LEGEND:

- PROPOSED CANOPY TREE SYMBOLS - SEE PLANT SCHEDULE AND PLAN FOR SPECIES AND PLANTING SIZES
- PROPOSED EVERGREEN TREE SYMBOLS - SEE PLANT SCHEDULE AND PLAN FOR SPECIES AND PLANTING SIZES
- PROPOSED ORNAMENTAL TREE SYMBOLS - SEE PLANT SCHEDULE AND PLAN FOR SPECIES AND PLANTING SIZES
- PROPOSED DECIDUOUS AND EVERGREEN SHRUB SYMBOLS - SEE PLANT SCHEDULE AND PLAN FOR SPECIES AND PLANTING SIZES
- PROPOSED PERENNIAL PLANT SYMBOLS - SEE PLANT SCHEDULE AND PLAN FOR SPECIES AND PLANTING SIZES
- EDGING - SHALL BE COMMERCIAL GRADE, 4" DEPTH ALUMINUM, BLACK OR DARK GREEN IN COLOR, INCLUDE ALL CONNECTORS, STAKES, & ALL APPURTENANCES PER MANUF. INSTALL PER MANUF. INSTRUC./SPECS.
- DECORATIVE BOULDERS (ROUNDED & BLOCK STYLE), 18"-30" DIA.
- CONSTRUCTION LIMITS

GROUND COVERS

	ROCK MAINTENANCE STRIP / ROCK MAINTENANCE STRIP	3,070 sf
	1.5" SCREENED ROCK/STONE, 3" DEEP / ROCK MULCH	1,028 sf
	BLUE GRASS SOD / SOD	17,628 sf
	SUBTOTAL:	21,726 sf

MNDOT - SEED MIXES

	MN SEED MIX #35-221 DRY PRAIRIE GENERAL, / MNDOT - GENERAL RESTORATION SEED MIX	6,229 sf
	MN SEED MIX #34-262 WET PRAIRIE / MNDOT - LOWER BASIN SEED MIX	4,955 sf
	SUBTOTAL:	11,184 sf

SEE SHEET L1.1 FOR PLANTING SCHEDULE

Know what's below. Call before you dig.

1" = 20'-0"
10'-0" 0 20'-0"

CivilSite GROUP
Civil Engineering ˚ Surveying ˚ Landscape Architecture
5000 Glenwood Avenue
Golden Valley, MN 55422
civilsitegroup.com 612-615-0060

PRELIMINARY: NOT FOR CONSTRUCTION

PROJECT
FAIRWAY COMMONS APARTMENTS
1644 LARPENTEUR AVE W, FALCON HEIGHTS, MN 55113

OWNER
VELAIR DEVELOPMENT COMPANY
7645 LYNDALE AVE SOUTH #300, MINNEAPOLIS, MN. 55423

I HEREBY CERTIFY THAT THIS PLAN, SPECIFICATION, OR REPORT WAS PREPARED BY ME OR UNDER MY DIRECT SUPERVISION AND THAT I AM A DULY LICENSED LANDSCAPE ARCHITECT UNDER THE LAWS OF THE STATE OF MINNESOTA.

Robert L. Binder
DATE 03/02/2026 LICENSE NO. 25821

ISSUE/SUBMITTAL SUMMARY

DATE	DESCRIPTION
03/02/2026	CITY SUBMITTAL

PROJECT MANAGER	DAVID KNAEBLE
CONTACT NUMBER	612-615-0060
DRAWN BY	BN
REVIEWED BY	DK
PROJECT NUMBER	25503

REVISION SUMMARY

DATE	DESCRIPTION

LANDSCAPE PLAN

L1.0

© COPYRIGHT 2026 CIVIL SITE GROUP INC.

PLANT SCHEDULE

CODE	COMMON / BOTANICAL NAME	QTY	CONT	NATIVE PLANTS	POLLINATOR FRIENDLY
DECIDUOUS TREES					
BC	Clump Paper Birch / Betula papyrifera 'Clump'	1	2.5" CAL. B&B	NATIVE CULTIVAR	N
GI	Skyline® Honey Locust / Gleditsia triacanthos inermis 'Skycole'	2	2.5" CAL. B&B	NATIVE CULTIVAR	N
	SUBTOTAL:	3			
ORNAMENTAL TREES					
MP	Prairifire Crabapple / Malus x 'Prairifire'	1	1.5" CAL. B&B	NOT NATIVE	Y
SI	Ivory Silk Japanese Tree Lilac / Syringa reticulata 'Ivory Silk'	3	1.5" CAL. B&B	NATIVE CULTIVAR	Y
	SUBTOTAL:	4			
CODE	COMMON / BOTANICAL NAME	QTY	SIZE	NATIVE PLANTS	POLLINATOR FRIENDLY
SHRUBS					
HJ	Little Lime® Panicle Hydrangea / Hydrangea paniculata 'Jane'	20	#3 CONT	NATIVE CULTIVAR	Y
MD	Siberian Carpet Cypress / Microbiota decussata	2	#3 CONT	NOT NATIVE	N
PD	Little Devil™ Dwarf Ninebark / Physocarpus opulifolius 'Donna May'	12	#3 CONT	NATIVE CULTIVAR	Y
SP	Dwarf Purple Osier Willow / Salix purpurea 'Nana'	11	#3 CONT	NOT NATIVE	Y
TN	Nova Japanese Yew / Taxus cuspidata 'Nova'	33	#5 CONT	NOT NATIVE	N
	SUBTOTAL:	78			
GRASSES					
CK	Karl Foerster Feather Reed Grass / Calamagrostis x acutiflora 'Karl Foerster'	13	#1 CONT	NOT NATIVE	N
SH	Prairie Dropseed / Sporobolus heterolepis	46	#1 CONT	NOT NATIVE	N
	SUBTOTAL:	59			
PERENNIALS					
AY	Younique™ White Astilbe / Astilbe x 'Verswhite'	17	#1 CONT	NATIVE CULTIVAR	Y
HR	Red Razzmatazz Daylily / Hemerocallis x 'Red Razzmatazz'	18	#1 CONT	NATIVE CULTIVAR	Y
HS	Stella Supreme Daylily / Hemerocallis x 'Stella Supreme'	38	#1 CONT	NATIVE CULTIVAR	Y
HC	Citronelle Yellow Coral Bells / Heuchera x 'Citronelle'	56	#1 CONT	NOT NATIVE	Y
PL	Little Spire Russian Sage / Perovskia atriplicifolia 'Little Spire'	48	#1 CONT	NATIVE CULTIVAR	Y
PB	Coral Flame™ Garden Phlox / Phlox paniculata 'Barsixtytwo'	21	#1 CONT	NATIVE CULTIVAR	Y
RG	Goldsturm Coneflower / Rudbeckia fulgida sullivantii 'Goldsturm'	40	#1 CONT	NATIVE CULTIVAR	Y
	SUBTOTAL:	238			

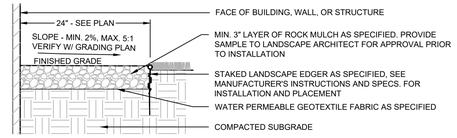

1 AGGREGATE MAINTANENCE STRIP
N T S

DRAWN @ ? size

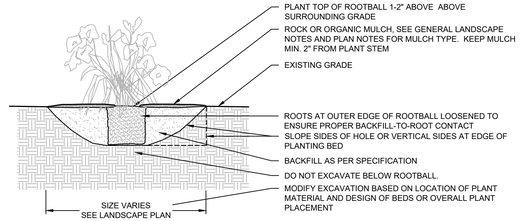

2 PERENNIAL BED PLANTING
N T S

DRAWN @ ? size

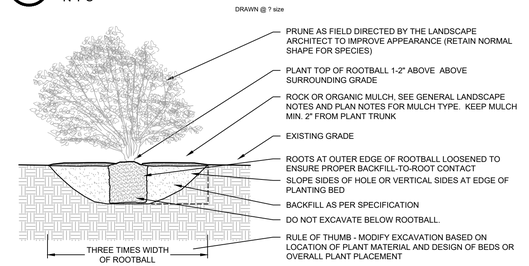

3 DECIDUOUS & CONIFEROUS SHRUB PLANTING
N T S

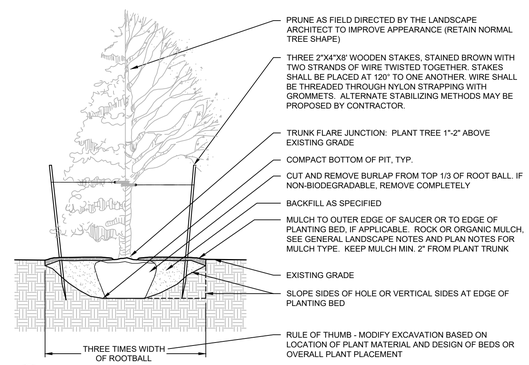

4 DECIDUOUS & CONIFEROUS TREE PLANTING
N T S

IRRIGATION NOTES:

1. ENTIRE SITE SHALL BE FULLY IRRIGATED. THE CONTRACTOR SHALL SUBMIT IRRIGATION SHOP DRAWINGS FOR REVIEW AND APPROVAL BY THE LANDSCAPE ARCHITECT PRIOR TO INSTALLATION.
2. PROVIDE SITE WIDE IRRIGATION SYSTEM DESIGN AND INSTALLATION. SYSTEM SHALL BE FULLY PROGRAMMABLE AND CAPABLE OF ALTERNATE DATE WATERING. THE SYSTEM SHALL PROVIDE HEAD TO HEAD OR DRIP COVERAGE AND BE CAPABLE OF DELIVERING ONE INCH OF PRECIPITATION PER WEEK. SYSTEM SHALL EXTEND INTO THE PUBLIC RIGHT-OF-WAY TO THE EDGE OF PAVEMENT/BACK OF CURB.
3. CONTRACTOR SHALL SECURE APPROVAL OF PROPOSED IRRIGATION SYSTEM INLCUDING PRICING FROM OWNER, PRIOR TO INSTALLATION.
4. SEE MECHANICAL AND ELECTRICAL PLANS AND SPECIFICATIONS FOR IRRIGATION WATER, METER, AND POWER CONNECTIONS.
5. CONTRACTOR TO VERIFY LOCATION OF ALL UNDERGROUND/ABOVE GROUND FACILITIES PRIOR TO ANY EXCAVATION/INSTALLATION. ANY DAMAGE TO UNDERGROUND/ABOVE GROUND FACILITIES SHALL BE THE RESPONSIBILITY OF THE CONTRACTOR AND COSTS ASSOCIATED WITH CORRECTING DAMAGES SHALL BE BORNE ENTIRELY BY THE CONTRACTOR.
6. SERVICE EQUIPMENT AND INSTALLATION SHALL BE PER LOCAL UTILITY COMPANY STANDARDS AND SHALL BE PER NATIONAL AND LOCAL CODES. EXACT LOCATION OF SERVICE EQUIPMENT SHALL BE COORDINATED WITH THE LANDSCAPE ARCHITECT OR EQUIVALENT AT THE JOB SITE.
7. CONTRACTOR SHALL COORDINATE WITH LOCAL UTILITY COMPANY FOR THE PROPOSED ELECTRICAL SERVICE AND METERING FACILITIES.
8. IRRIGATION WATER LINE CONNECTION SIZE IS 1-½" AT BUILDING. VERIFY WITH MECHANICAL PLANS.
9. ALL MAIN LINES SHALL BE 18" BELOW FINISHED GRADE.
10. ALL LATERAL LINES SHALL BE 12" BELLOW FINISHED GRADE.
11. ALL EXPOSED PVC RISERS, IF ANY, SHALL BE GRAY IN COLOR.
12. CONTRACTOR SHALL LAY ALL SLEEVES AND CONDUIT AT 2'-0" BELOW THE FINISHED GRADE OF THE TOP OF PAVEMENT. EXTEND SLEEVES TO 2'-0" BEYOND PAVEMENT.
13. CONTRACTOR SHALL MARK THE LOCATION OF ALL SLEEVES AND CONDUIT WITH THE SLEEVING MATERIAL "ELLED" TO 2'-0" ABOVE FINISHED GRADE AND CAPPED.
14. FABRICATE ALL PIPE TO MANUFACTURE'S SPECIFICATIONS WITH CLEAN AND SQUARE CUT JOINTS. USE QUALITY GRADE PRIMER AND SOLVENT CEMENT FORMULATED FOR INTENDED TYPE OF CONNECTION.
15. BACKFILL ALL TRENCHES WITH SOIL FREE OF SHARP OBJECTS AND DEBRIS.
16. ALL VALVE BOXES AND COVERS SHALL BE BLACK IN COLOR.
17. GROUP VALVE BOXES TOGETHER FOR EASE WHEN SERVICE IS REQUIRED. LOCATE IN PLANT BED AREAS WHENEVER POSSIBLE.
18. IRRIGATION CONTROLLER LOCATION SHALL BE VERIFIED ON-SITE WITH OWNER'S REPRESENTATIVE.
19. CONTROL WIRES: 14 GAUGE DIRECT BURIAL, SOLID COPPER IRRIGATION WIRE. RUN UNDER MAIN LINE. USE MOISTURE-PROOF SPLICES AND SPLICE ONLY AT VALVES OR PULL BOXES. RUN SEPARATE HOT AND COMMON WIRE TO EACH VALVE AND ONE (1) SPARE WIRE AND GROUND TO FURTHEST VALVE FROM CONTROLLER. LABEL OR COLOR CODE ALL WIRES.
20. AVOID OVER SPRAY ON BUILDINGS, PAVEMENT, WALLS AND ROADWAYS BY INDIVIDUALLY ADJUSTING RADIUS OR ARC ON SPRINKLER HEADS AND FLOW CONTROL ON AUTOMATIC VALVE.
21. ADJUST PRESSURE REGULATING VALVES FOR OPTIMUM PRESSURE ON SITE.
22. USE SCREENS ON ALL HEADS.
23. A SET OF AS-BUILT DRAWINGS SHALL BE MAINTAINED ON-SITE AT ALL TIMES IN AN UPDATED CONDITION.
24. ALL PIPE 3" AND OVER SHALL HAVE THRUST BLOCKING AT EACH TURN.
25. ALL AUTOMATIC REMOTE CONTROL VALVES WILL HAVE 3" MINIMUM DEPTH OF 3/4" WASHED GRAVEL UNDERNEATH VALVE AND VALVE BOX. GRAVEL SHALL EXTENT 3" BEYOND PERIMETER OF VALVE BOX.
26. THERE SHALL BE 3" MINIMUM SPACE BETWEEN BOTTOM OF VALVE BOX COVER AND TOP OF VALVE STRUCTURE.

SEE SHEET L1.0 FOR GENERAL LANDSCAPE NOTES & LEGEND

Know what's below. Call before you dig.

CivilSite GROUP
Civil Engineering ˚ Surveying ˚ Landscape Architecture
5000 Glenwood Avenue
Golden Valley, MN 55422
civilsitegroup.com 612-615-0060

PRELIMINARY: NOT FOR CONSTRUCTION

PROJECT
FAIRWAY COMMONS APARTMENTS
1644 LARPENTEUR AVE W, FALCON HEIGHTS, MN 55113

OWNER
VELAIR DEVELOPMENT COMPANY
7645 LYNDALE AVE SOUTH #300, MINNEAPOLIS, MN. 55423

I HEREBY CERTIFY THAT THIS PLAN, SPECIFICATION, OR REPORT WAS PREPARED BY ME OR UNDER MY DIRECT SUPERVISION AND THAT I AM A DULY LICENSED LANDSCAPE ARCHITECT UNDER THE LAWS OF THE STATE OF MINNESOTA.

Robert L. Binder
DATE 03/02/2026 LICENSE NO. 25821

ISSUE/SUBMITTAL SUMMARY

DATE	DESCRIPTION
03/02/2026	CITY SUBMITTAL

PROJECT MANAGER	DAVID KNAEBLE
CONTACT NUMBER	612-615-0060
DRAWN BY	BN
REVIEWED BY	DK
PROJECT NUMBER	25503

REVISION SUMMARY

DATE	DESCRIPTION

LANDSCAPE PLAN NOTES & DETAILS

L1.1

© COPYRIGHT 2026 CIVIL SITE GROUP INC.

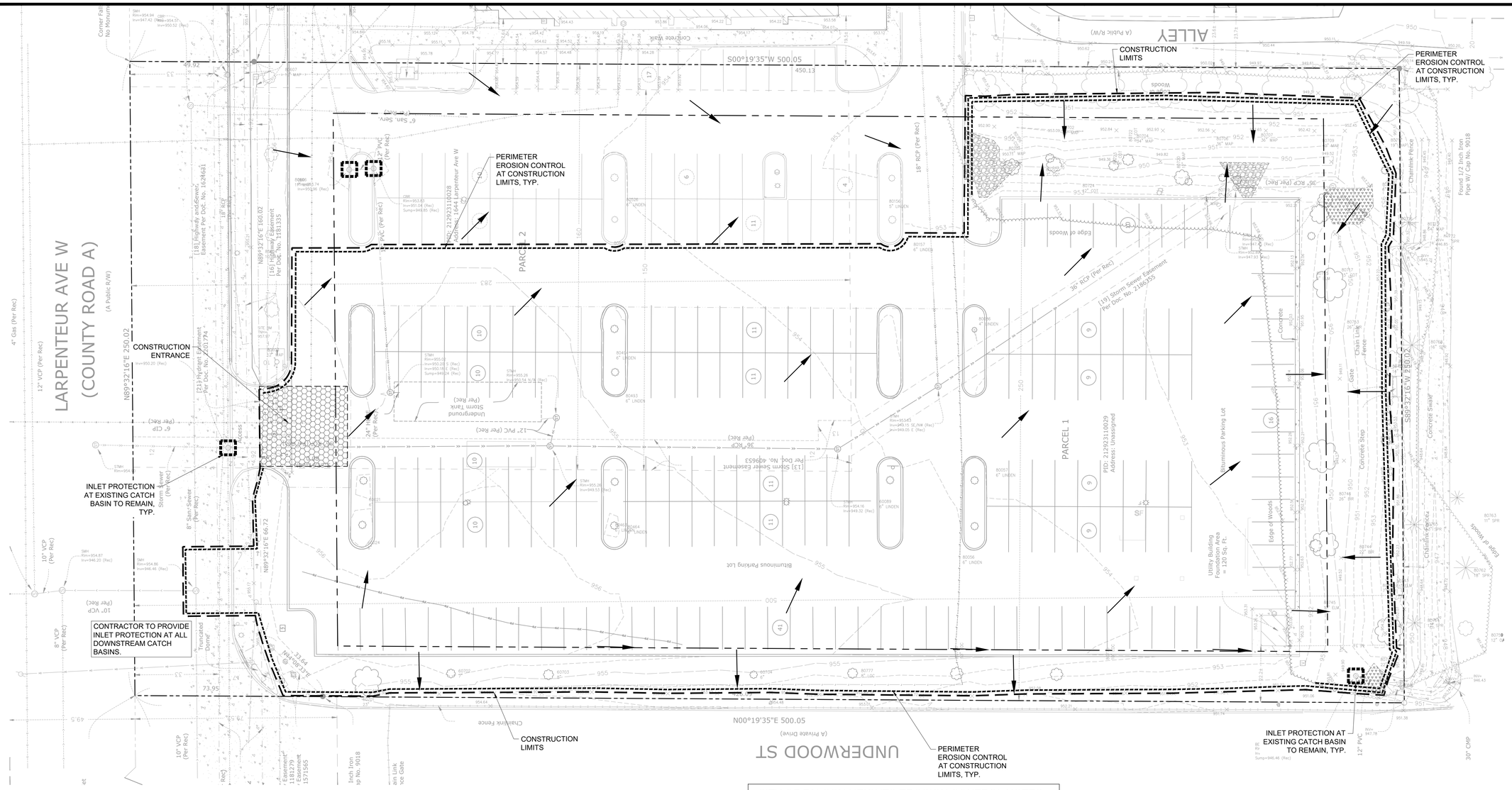

SWPPP NOTES:

1. ALL EXISTING UTILITY LOCATIONS SHOWN ARE APPROXIMATE. CONTACT "GOPHER STATE ONE CALL" (651-454-0002 OR 800-252-1166) FOR UTILITY LOCATIONS, 48 HOURS PRIOR TO CONSTRUCTION. THE CONTRACTOR SHALL REPAIR OR REPLACE ANY UTILITIES THAT ARE DAMAGED DURING CONSTRUCTION AT NO COST TO THE OWNER.
2. THIS PROJECT IS GREATER THAN ONE ACRE AND WILL REQUIRE AN MPCA NPDES PERMIT. CONTRACTOR IS RESPONSIBLE FOR OBTAINING ANY EROSION CONTROL PERMITS REQUIRED BY THE CITY.
3. SEE SHEETS SW1.0 - SW1.5 FOR ALL EROSION CONTROL NOTES, DESCRIPTIONS, AND PRACTICES.
4. SEE GRADING PLAN FOR ADDITIONAL GRADING AND EROSION CONTROL NOTES.
5. CONTRACTOR IS RESPONSIBLE FOR SWPPP IMPLEMENTATION, INSPECTIONS, MAINTENANCE AND COMPLIANCE WITH THE PERMIT.

CITY OF FALCON HEIGHTS EROSION CONTROL NOTES:

1. RESERVED FOR CITY SPECIFIC EROSION CONTROL NOTES.

ALL SPECIFIED EROSION AND SEDIMENT CONTROL PRACTICES, AND MEASURES CONTAINED IN THIS SWPPP ARE THE MINIMUM REQUIREMENTS. ADDITIONAL PRACTICES MAY BE REQUIRED DURING THE COURSE OF CONSTRUCTION.

SWPPP LEGEND:

- 1125 — EX. 1' CONTOUR ELEVATION INTERVAL
- DRAINAGE ARROW
- SILT FENCE / BIOROLL - GRADING LIMIT
- INLET PROTECTION
- STABILIZED CONSTRUCTION ENTRANCE

Know what's below. Call before you dig.

1" = 20'-0"
10'-0" 0 20'-0"

CivilSite GROUP
Civil Engineering ˚ Surveying ˚ Landscape Architecture
5000 Glenwood Avenue
Golden Valley, MN 55422
civilsitegroup.com 612-615-0060

PRELIMINARY: NOT FOR CONSTRUCTION

PROJECT
FAIRWAY COMMONS APARTMENTS
1644 LARPENTEUR AVE W, FALCON HEIGHTS, MN 55113

OWNER
VELAIR DEVELOPMENT COMPANY
7645 LYNDALE AVE SOUTH #300, MINNEAPOLIS, MN, 55423

I HEREBY CERTIFY THAT THIS PLAN, SPECIFICATION, OR REPORT WAS PREPARED BY ME OR UNDER MY DIRECT SUPERVISION AND THAT I AM A DULY LICENSED PROFESSIONAL ENGINEER UNDER THE LAWS OF THE STATE OF MINNESOTA.

David J. Knaeble
DATE 03/02/2026 LICENSE NO. 48776

ISSUE/SUBMITTAL SUMMARY

DATE	DESCRIPTION
03/02/2026	CITY SUBMITTAL

PROJECT MANAGER	DAVID KNAEBLE
CONTACT NUMBER	612-615-0060
DRAWN BY	BN
REVIEWED BY	DK
PROJECT NUMBER	25503

REVISION SUMMARY

DATE	DESCRIPTION

SWPPP - EXISTING CONDITIONS

SW1.0

© COPYRIGHT 2026 CIVIL SITE GROUP INC.

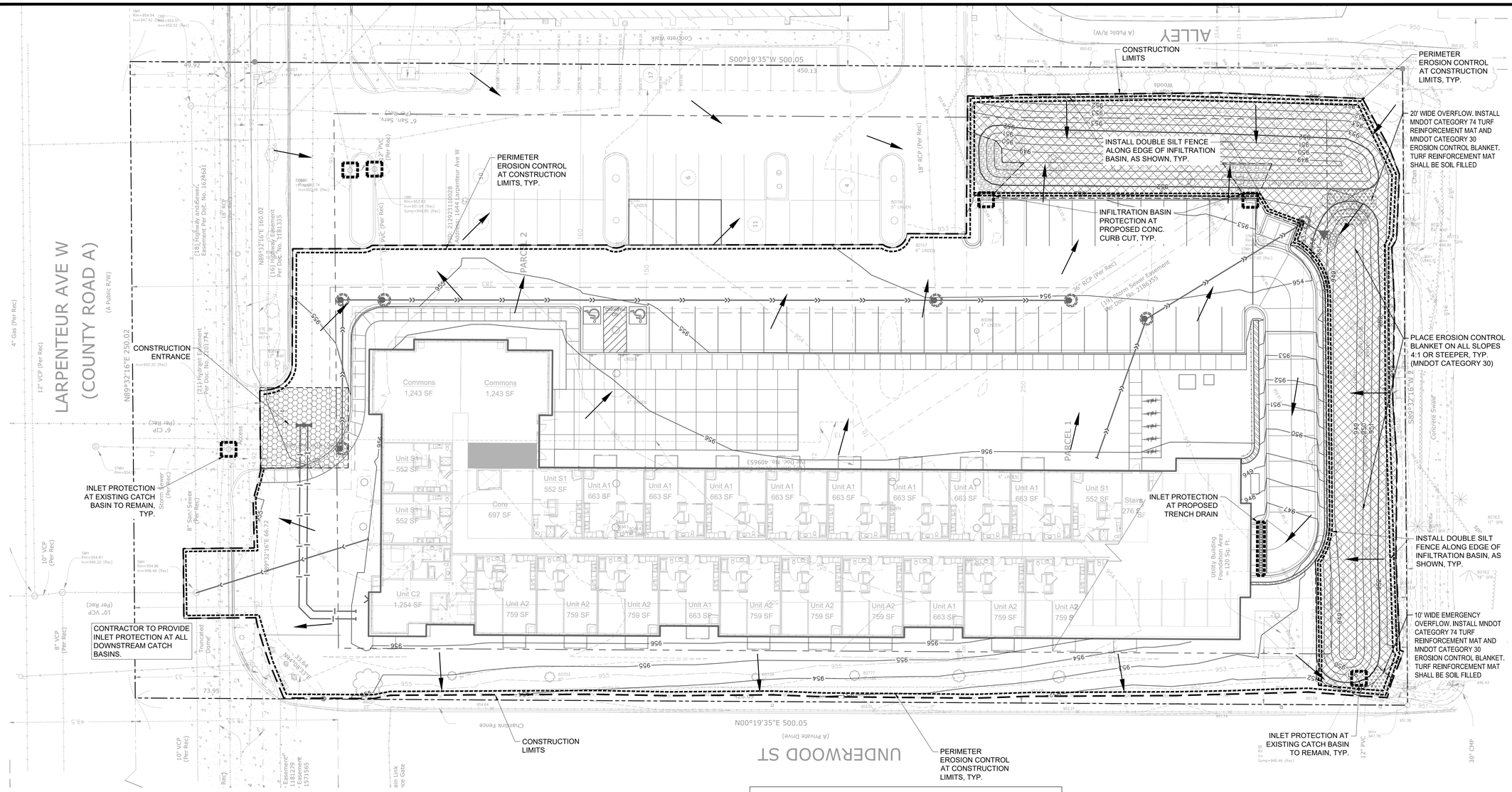

SWPPP NOTES:

1. ALL EXISTING UTILITY LOCATIONS SHOWN ARE APPROXIMATE. CONTACT "GOPHER STATE ONE CALL" (651-454-0002 OR 800-252-1166) FOR UTILITY LOCATIONS, 48 HOURS PRIOR TO CONSTRUCTION. THE CONTRACTOR SHALL REPAIR OR REPLACE ANY UTILITIES THAT ARE DAMAGED DURING CONSTRUCTION AT NO COST TO THE OWNER.
2. THIS PROJECT IS GREATER THAN ONE ACRE AND WILL REQUIRE AN MPCA NPDES PERMIT. CONTRACTOR IS RESPONSIBLE FOR OBTAINING ANY EROSION CONTROL PERMITS REQUIRED BY THE CITY.
3. SEE SHEETS SW1.0 - SW1.5 FOR ALL EROSION CONTROL NOTES, DESCRIPTIONS, AND PRACTICES.
4. SEE GRADING PLAN FOR ADDITIONAL GRADING AND EROSION CONTROL NOTES.
5. CONTRACTOR IS RESPONSIBLE FOR SWPPP IMPLEMENTATION, INSPECTIONS, MAINTENANCE AND COMPLIANCE WITH THE PERMIT.

CITY OF FALCON HEIGHTS EROSION CONTROL NOTES:

1. RESERVED FOR CITY SPECIFIC EROSION CONTROL NOTES.

ALL SPECIFIED EROSION AND SEDIMENT CONTROL PRACTICES, AND MEASURES CONTAINED IN THIS SWPPP ARE THE MINIMUM REQUIREMENTS. ADDITIONAL PRACTICES MAY BE REQUIRED DURING THE COURSE OF CONSTRUCTION.

SWPPP LEGEND:

- 1125 — EX. 1' CONTOUR ELEVATION INTERVAL
- 1137 — 1.0' CONTOUR ELEVATION INTERVAL
- DRAINAGE ARROW
- SILT FENCE / BIOROLL - GRADING LIMIT
- INLET PROTECTION
- STABILIZED CONSTRUCTION ENTRANCE
- EROSION CONTROL BLANKET

Know what's **below.** **Call** before you dig.

1" = 20'-0"
10'-0" 0 20'-0"

CivilSite GROUP
Civil Engineering * Surveying * Landscape Architecture
5000 Glenwood Avenue
Golden Valley, MN 55422
civilsitegroup.com 612-615-0060

PRELIMINARY: NOT FOR CONSTRUCTION

PROJECT
FAIRWAY COMMONS APARTMENTS
1644 LARPENTEUR AVE W, FALCON HEIGHTS, MN 55113

OWNER
VELAIR DEVELOPMENT COMPANY
7645 LYNDALE AVE SOUTH #300, MINNEAPOLIS, MN. 55423

I HEREBY CERTIFY THAT THIS PLAN, SPECIFICATION, OR REPORT WAS PREPARED BY ME OR UNDER MY DIRECT SUPERVISION AND THAT I AM A DULY LICENSED PROFESSIONAL ENGINEER UNDER THE LAWS OF THE STATE OF MINNESOTA.

David J. Knaeble
DATE 03/02/2026 LICENSE NO. 48776

ISSUE/SUBMITTAL SUMMARY

DATE	DESCRIPTION
03/02/2026	CITY SUBMITTAL

PROJECT MANAGER	DAVID KNAEBLE
CONTACT NUMBER	612-615-0060
DRAWN BY	BN
REVIEWED BY	DK
PROJECT NUMBER	25503

REVISION SUMMARY

DATE	DESCRIPTION

SWPPP - PROPOSED CONDITIONS

SW1.1

© COPYRIGHT 2026 CIVIL SITE GROUP INC.

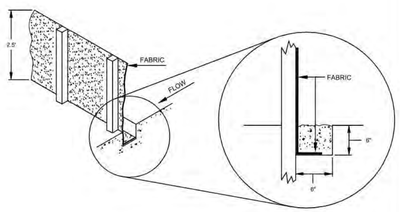

NOTES:

- PLACE BOTTOM EDGE OF FENCE INTO 6" DEEP TRENCH AND BACKFILL IMMEDIATELY.
- POSTS SHALL BE 4.0' ON CENTER DRIVEN 2.0' INTO THE GROUND.
- POSTS SHALL BE 2" x2" AND BE MADE OF PINE, HARDWOOD, OR STEEL. MINIMUM LENGTH TO BE 4.5'.
- SILT FENCE SHALL CONFORM TO MnDOT 3886, TYPE B.
- FENCING SHALL BE PLACED ALONG CONTOURS OR AS DIRECTED BY THE ENGINEER.

DESIGN:	DATE:3-08-07	ROSEVILLE ENGINEERING DEPARTMENT	PLATE NUMBER
DRAWN:		EROSION CONTROL FENCE	EC-1
REVISIONS			

EROSION CONTROL FENCE.dwg

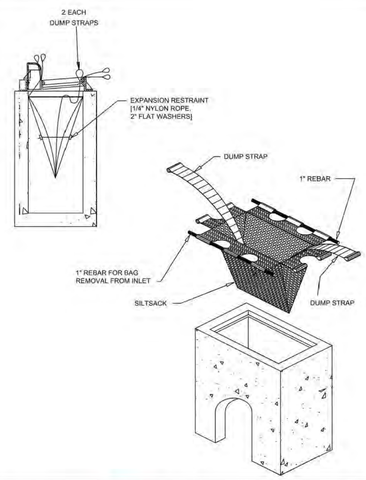

DESIGN:	DATE:	ROSEVILLE ENGINEERING DEPARTMENT	PLATE NUMBER
DRAWN:		INLET PROTECTION SEDIMENT FILTER SACK	EC-2
REVISIONS			

SEDIMENT FILTER SACK.dwg

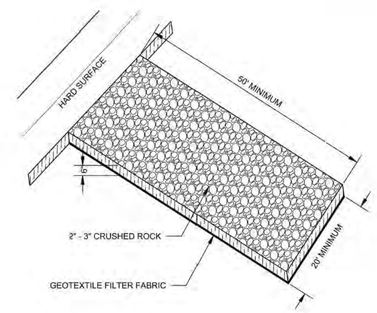

DESIGN:	DATE:8-21-13	ROSEVILLE ENGINEERING DEPARTMENT	PLATE NUMBER
DRAWN:		ROCK CONSTRUCTION ENTRANCE	EC-3
REVISIONS			

ROCK CONSTRUCTION ENTRANCE.dwg

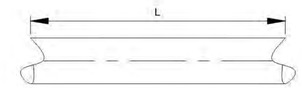

BIOROLLS OR APPROVED EQUIVALENT EROSION CONTROL INLET PROTECTION TYPE A

NOTES
- INSTALL ACCORDING TO MANUFACTURER INSTRUCTION UNLESS DIRECTED BY ENGINEER.
- ALL CATCH BASIN SIDES MUST HAVE PERIMETER CONTROL INSTALLED PER ENGINEER APPROVAL.
- (L) LENGTH OF INSTALLED PERIMETER CONTROL MUST BE APPROVED BY ENGINEER

DESIGN:	DATE:	ROSEVILLE ENGINEERING DEPARTMENT	PLATE NUMBER
DRAWN:		INLET PROTECTION TYPE A	EC-4
REVISIONS	02-08-2018		

INLET PROTECTION TYPE A.dwg

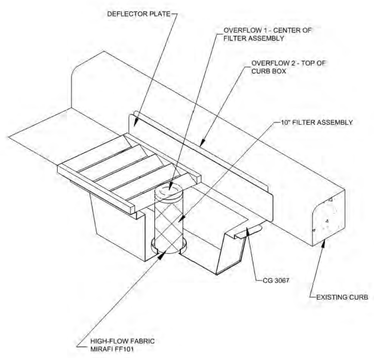

DESIGN:	DATE:	ROSEVILLE ENGINEERING DEPARTMENT	PLATE NUMBER
DRAWN:		INLET PROTECTION TYPE B	EC-5
REVISIONS	02 08 2018		

INLET PROTECTION TYPE B.dwg

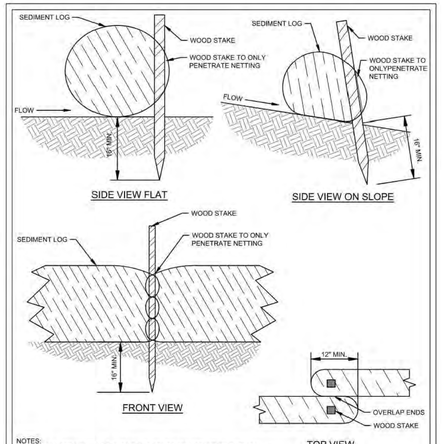

NOTES:
1. INSTALL SEDIMENT LOG ALONG CONTOURS (CONSTANT ELEVATION).
2. NO GAPS SHALL BE PRESENT UNDER SEDIMENT LOG. PREPARE AREA AS NEEDED TO SMOOTH SURFACE OR REMOVE DEBRIS.
3. REMOVE ACCUMULATED SEDIMENT WHEN REACHING $\frac{1}{2}$ OF LOG HEIGHT.
4. MAINTAIN SEDIMENT LOG THROUGHOUT THE CONSTRUCTION PERIOD AND REPAIR OR REPLACE AS REQUIRED.

DESIGN:	DATE:3-20-20	ROSEVILLE ENGINEERING DEPARTMENT	PLATE NUMBER
DRAWN:	DRT	SEDIMENT LOG INSTALLATION	EC-6
REVISIONS			

EROSION CONTROL FENCE.dwg

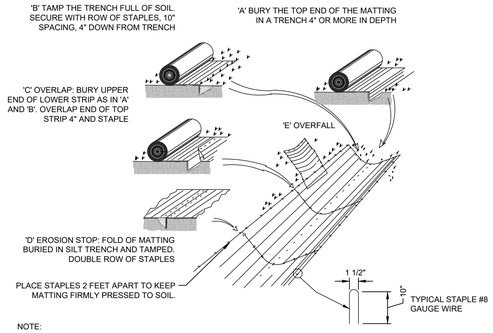

NOTE:
1. PLACE STAPLES 2 FEET APART TO KEEP MATTING FIRMLY PRESSED TO SOIL.

1 EROSION BLANKET
N T S

CivilSite GROUP
Civil Engineering * Surveying * Landscape Architecture
5000 Glenwood Avenue
Golden Valley, MN 55422
civilsitegroup.com 612-615-0060

PRELIMINARY: NOT FOR CONSTRUCTION

PROJECT
FAIRWAY COMMONS APARTMENTS
1644 LARPENTEUR AVE W, FALCON HEIGHTS, MN 55113

OWNER
VELAIR DEVELOPMENT COMPANY
7645 LYNDALE AVE SOUTH #300, MINNEAPOLIS, MN, 55423

I HEREBY CERTIFY THAT THIS PLAN, SPECIFICATION, OR REPORT WAS PREPARED BY ME OR UNDER MY DIRECT SUPERVISION AND THAT I AM A DULY LICENSED PROFESSIONAL ENGINEER UNDER THE LAWS OF THE STATE OF MINNESOTA.

David J. Knaeble
DATE 03/02/2026 LICENSE NO. 48776

ISSUE/SUBMITTAL SUMMARY

DATE	DESCRIPTION
03/02/2026	CITY SUBMITTAL

PROJECT MANAGER	DAVID KNAEBLE
CONTACT NUMBER	612-615-0060
DRAWN BY	BN
REVIEWED BY	DK
PROJECT NUMBER	25503

REVISION SUMMARY

DATE	DESCRIPTION

SWPPP - DETAILS

SW1.2

© COPYRIGHT 2026 CIVIL SITE GROUP INC.

THE CONTRACTOR AND ALL SUBCONTRACTORS INVOLVED WITH A CONSTRUCTION ACTIVITY THAT DISTURBS SITE SOIL OR WHO IMPLEMENT A POLLUTANT CONTROL MEASURE IDENTIFIED IN THE STORM WATER POLLUTION PREVENTION PLAN (SWPPP) MUST COMPLY WITH THE REQUIREMENTS OF THE NATIONAL POLLUTION DISCHARGE ELIMINATION SYSTEM (NPDES) GENERAL PERMIT (DATED AUGUST 1, 2018 # MNR100001) AND ANY LOCAL GOVERNING AGENCY HAVING JURISDICTION CONCERNING EROSION AND SEDIMENTATION CONTROL.

STORMWATER DISCHARGE DESIGN REQUIREMENTS

SWPPP

THE NATURE OF THIS PROJECT WILL BE CONSISTENT WITH WHAT IS REPRESENTED IN THIS SET OF CONSTRUCTION PLANS AND SPECIFICATIONS. SEE THE SWPPP PLAN SHEETS AND SWPPP NARRATIVE (ATTACHMENT A: CONSTRUCTION SWPPP TEMPLATE) FOR ADDITIONAL SITE SPECIFIC SWPPP INFORMATION. THE PLANS SHOW LOCATIONS AND TYPES OF ALL TEMPORARY AND PERMANENT EROSION PREVENTION AND SEDIMENT CONTROL BMP'S. STANDARD DETAILS ARE ATTACHED TO THIS SWPPP DOCUMENT.

THE INTENDED SEQUENCING OF MAJOR CONSTRUCTION ACTIVITIES IS AS FOLLOWS:
1. INSTALL STABILIZED ROCK CONSTRUCTION ENTRANCE
2. INSTALLATION OF SILT FENCE AROUND SITE
3. INSTALL ORANGE CONSTRUCTION FENCING AROUND INFILTRATION AREAS
4. INSTALL INLET PROTECTION AT ALL ADJACENT AND DOWNSTREAM CATCH BASINS
5. CLEAR AND GRUB FOR TEMPORARY SEDIMENT BASIN / POND INSTALL
6. CONSTRUCT TEMPORARY SEDIMENT BASIN / POND (SECTION 14)
7. CLEAR AND GRUB REMAINDER OF SITE
8. STRIP AND STOCKPILE TOPSOIL
9. ROUGH GRADING OF SITE
10. STABILIZE DENUDED AREAS AND STOCKPILES
11. INSTALL SANITARY SEWER, WATER MAIN STORM SEWER AND SERVICES
12. INSTALL SILT FENCE / INLET PROTECTION AROUND CB'S
13. INSTALL STREET SECTION
14. INSTALL CURB AND GUTTER
15. BITUMINOUS ON STREETS
16. FINAL GRADE BOULEVARD, INSTALL SEED AND MULCH
17. REMOVE ACCUMULATED SEDIMENT FROM BASIN / POND
18. FINAL GRADE POND / INFILTRATION BASINS (DO NOT COMPACT SOILS IN INFILTRATION AREAS.)
19. WHEN ALL CONSTRUCTION ACTIVITY IS COMPLETE AND THE SITE IS STABILIZED BY EITHER SEED OR SOD/LANDSCAPING, REMOVE SILT FENCE AND RESEED ANY AREAS DISTURBED BY THE REMOVAL.

RECORDS RETENTION:

THE SWPPP (ORIGINAL OR COPIES) INCLUDING, ALL CHANGES TO IT, AND INSPECTIONS AND MAINTENANCE RECORDS MUST BE KEPT AT THE SITE DURING CONSTRUCTION BY THE PERMITTEE WHO HAS OPERATIONAL CONTROL OF THAT PORTION OF THE SITE. THE SWPPP CAN BE KEPT IN EITHER THE FIELD OFFICE OR IN AN ON SITE VEHICLE DURING NORMAL WORKING HOURS.

ALL OWNER(S) MUST KEEP THE SWPPP, ALONG WITH THE FOLLOWING ADDITIONAL RECORDS, ON FILE FOR THREE (3) YEARS AFTER SUBMITTAL OF THE NOT AS OUTLINED IN SECTION 4. THIS DOES NOT INCLUDE ANY RECORDS AFTER SUBMITTAL OF THE NOT.

1. THE FINAL SWPPP;
2. ANY OTHER STORMWATER RELATED PERMITS REQUIRED FOR THE PROJECT;
3. RECORDS OF ALL INSPECTION AND MAINTENANCE CONDUCTED DURING CONSTRUCTION (SEE SECTION 11, INSPECTIONS AND MAINTENANCE);
4. ALL PERMANENT OPERATION AND MAINTENANCE AGREEMENTS THAT HAVE BEEN IMPLEMENTED, INCLUDING ALL RIGHT OF WAY, CONTRACTS, COVENANTS AND OTHER BINDING REQUIREMENTS REGARDING PERPETUAL MAINTENANCE; AND
5. ALL REQUIRED CALCULATIONS FOR DESIGN OF THE TEMPORARY AND PERMANENT STORMWATER MANAGEMENT SYSTEMS.

SWPPP IMPLEMENTATION RESPONSIBILITIES:

1. THE OWNER AND CONTRACTOR ARE PERMITTEE(S) AS IDENTIFIED BY THE NPDES PERMIT.
2. CONTRACTOR SHALL BE RESPONSIBLE FOR ALL ON-SITE IMPLEMENTATION OF THE SWPPP, INCLUDING THE ACTIVITIES OF ALL OF THE CONTRACTOR'S SUBCONTRACTORS.
3. CONTRACTOR SHALL PROVIDE A PERSON(S) KNOWLEDGEABLE AND EXPERIENCED IN THE APPLICATION OF EROSION PREVENTION AND SEDIMENT CONTROL BMPS TO OVERSEE ALL INSTALLATION AND MAINTENANCE OF BMPS AND IMPLEMENTATION OF THE SWPPP.
4. CONTRACTOR SHALL PROVIDE PERSON(S) MEETING THE TRAINING REQUIREMENTS OF THE NPDES PERMIT TO CONDUCT INSPECTION AND MAINTENANCE OF ALL EROSION PREVENTION AND SEDIMENT CONTROL BMPS IN ACCORDANCE WITH THE REQUIREMENTS OF THE PERMIT. ONE OF THESE INDIVIDUAL(S) MUST BE AVAILABLE FOR AN ONSITE INSPECTION WITHIN 72 HOURS UPON REQUEST BY MPCA. CONTRACTOR SHALL PROVIDE TRAINING DOCUMENTATION FOR THESE INDIVIDUAL(S) AS REQUIRED BY THE NPDES PERMIT. THIS TRAINING DOCUMENTATION SHALL BE RECORDED IN OR WITH THE SWPPP BEFORE THE START OF CONSTRUCTION OR AS SOON AS THE PERSONNEL FOR THE PROJECT HAVE BEEN DETERMINED. DOCUMENTATION SHALL INCLUDE:
   - 4.1. NAMES OF THE PERSONNEL ASSOCIATED WITH THE PROJECT THAT ARE REQUIRED TO BE TRAINED PER SECTION 21 OF THE PERMIT.
   - 4.2. DATES OF TRAINING AND NAME OF INSTRUCTOR AND ENTITY PROVIDING TRAINING.
   - 4.3. CONTENT OF TRAINING COURSE OR WORKSHOP INCLUDING THE NUMBER OF HOURS OF TRAINING.
5. FOLLOWING FINAL STABILIZATION AND THE TERMINATION OF COVERAGE FOR THE NPDES PERMIT, THE OWNER IS EXPECTED TO FURNISH LONG TERM OPERATION AND MAINTENANCE (O & M) OF THE PERMANENT STORM WATER MANAGEMENT SYSTEM.

CONSTRUCTION ACTIVITY REQUIREMENTS

SWPPP AMENDMENTS (SECTION 6):

1. ONE OF THE INDIVIDUALS DESCRIBED IN ITEM 21.2.A OR ITEM 21.2.B OR ANOTHER QUALIFIED INDIVIDUAL MUST COMPLETE ALL SWPPP CHANGES. CHANGES INVOLVING THE USE OF A LESS STRINGENT BMP MUST INCLUDE A JUSTIFICATION DESCRIBING HOW THE REPLACEMENT BMP IS EFFECTIVE FOR THE SITE CHARACTERISTICS.
2. PERMITTEES MUST AMEND THE SWPPP TO INCLUDE ADDITIONAL OR MODIFIED BMPS AS NECESSARY TO CORRECT PROBLEMS IDENTIFIED OR ADDRESS SITUATIONS WHENEVER THERE IS A CHANGE IN DESIGN, CONSTRUCTION, OPERATION, MAINTENANCE, WEATHER OR SEASONAL CONDITIONS HAVING A SIGNIFICANT EFFECT ON THE DISCHARGE OF POLLUTANTS TO SURFACE WATERS OR GROUNDWATER.
3. PERMITTEES MUST AMEND THE SWPPP TO INCLUDE ADDITIONAL OR MODIFIED BMPS AS NECESSARY TO CORRECT PROBLEMS IDENTIFIED OR ADDRESS SITUATIONS WHENEVER INSPECTIONS OR INVESTIGATIONS BY THE SITE OWNER OR OPERATOR, USEPA OR MPCA OFFICIALS INDICATE THE SWPPP IS NOT EFFECTIVE IN ELIMINATING OR SIGNIFICANTLY MINIMIZING THE DISCHARGE OF POLLUTANTS TO SURFACE WATERS OR GROUNDWATER OR THE DISCHARGES ARE CAUSING WATER QUALITY STANDARD EXCEEDANCES (E.G., NUISANCE CONDITIONS AS DEFINED IN MINN. R. 7050.0210, SUBP. 2) OR THE SWPPP IS NOT CONSISTENT WITH THE OBJECTIVES OF A USEPA APPROVED TMDL.

BMP SELECTION AND INSTALLATION (SECTION 7):

1. PERMITTEES MUST SELECT, INSTALL, AND MAINTAIN THE BMPS IDENTIFIED IN THE SWPPP AND IN THIS PERMIT IN AN APPROPRIATE AND FUNCTIONAL MANNER AND IN ACCORDANCE WITH RELEVANT MANUFACTURER SPECIFICATIONS AND ACCEPTED ENGINEERING PRACTICES.

EROSION PREVENTION (SECTION 8):

1. BEFORE WORK BEGINS, PERMITTEES MUST DELINEATE THE LOCATION OF AREAS NOT TO BE DISTURBED.
2. PERMITTEES MUST MINIMIZE THE NEED FOR DISTURBANCE OF PORTIONS OF THE PROJECT WITH STEEP SLOPES. WHEN STEEP SLOPES MUST BE DISTURBED, PERMITTEES MUST USE TECHNIQUES SUCH AS PHASING AND STABILIZATION PRACTICES DESIGNED FOR STEEP SLOPES (E.G., SLOPE DRAINING AND TERRACING).
3. PERMITTEES MUST STABILIZE ALL EXPOSED SOIL AREAS, INCLUDING STOCKPILES. STABILIZATION MUST BE INITIATED IMMEDIATELY TO LIMIT SOIL EROSION WHEN CONSTRUCTION ACTIVITY HAS PERMANENTLY OR TEMPORARILY CEASED ON ANY PORTION OF THE SITE AND WILL NOT RESUME FOR A PERIOD EXCEEDING 14 CALENDAR DAYS. STABILIZATION MUST BE COMPLETED NO LATER THAN 14 CALENDAR DAYS AFTER THE CONSTRUCTION ACTIVITY HAS CEASED. STABILIZATION IS NOT REQUIRED ON CONSTRUCTED BASE COMPONENTS OF ROADS, PARKING LOTS AND SIMILAR SURFACES. STABILIZATION IS NOT REQUIRED ON TEMPORARY STOCKPILES WITHOUT SIGNIFICANT SILT, CLAY OR ORGANIC COMPONENTS (E.G., CLEAN AGGREGATE STOCKPILES, DEMOLITION CONCRETE STOCKPILES, SAND STOCKPILES) BUT PERMITTEES MUST PROVIDE SEDIMENT CONTROLS AT THE BASE OF THE STOCKPILE.
4. FOR PUBLIC WATERS THAT THE MINNESOTA DNR HAS PROMULGATED "WORK IN WATER RESTRICTIONS" DURING SPECIFIED FISH SPAWNING TIME FRAMES, PERMITTEES MUST COMPLETE STABILIZATION OF ALL EXPOSED SOIL AREAS WITHIN 200 FEET OF THE WATER'S EDGE, AND THAT DRAIN TO THESE WATERS, WITHIN 24 HOURS DURING THE RESTRICTION PERIOD.
5. PERMITTEES MUST STABILIZE THE NORMAL WETTED PERIMETER OF THE LAST 200 LINEAR FEET OF TEMPORARY OR PERMANENT DRAINAGE DITCHES OR SWALES THAT DRAIN WATER FROM THE SITE WITHIN 24 HOURS AFTER CONNECTING TO A SURFACE WATER OR PROPERTY EDGE. PERMITTEES MUST COMPLETE STABILIZATION OF REMAINING PORTIONS OF TEMPORARY OR PERMANENT DITCHES OR SWALES WITHIN 14 CALENDAR DAYS AFTER CONNECTING TO A SURFACE WATER OR PROPERTY EDGE AND CONSTRUCTION IN THAT PORTION OF THE DITCH TEMPORARILY OR PERMANENTLY CEASES.
6. TEMPORARY OR PERMANENT DITCHES OR SWALES BEING USED AS A SEDIMENT CONTAINMENT SYSTEM DURING CONSTRUCTION (WITH PROPERLY DESIGNED ROCK-DITCH CHECKS, BIO ROLLS, SILT DIKES, ETC.) DO NOT NEED TO BE STABILIZED. PERMITTEES MUST STABILIZE THESE AREAS WITHIN 24 HOURS AFTER THEIR USE AS A SEDIMENT CONTAINMENT SYSTEM CEASES
7. PERMITTEES MUST NOT USE MULCH, HYDROMULCH, TACKIFIER, POLYACRYLAMIDE OR SIMILAR EROSION PREVENTION PRACTICES WITHIN ANY PORTION OF THE NORMAL WETTED PERIMETER OF A TEMPORARY OR PERMANENT DRAINAGE DITCH OR SWALE SECTION WITH A CONTINUOUS SLOPE OF GREATER THAN 2 PERCENT.
8. PERMITTEES MUST PROVIDE TEMPORARY OR PERMANENT ENERGY DISSIPATION AT ALL PIPE OUTLETS WITHIN 24 HOURS AFTER CONNECTION TO A SURFACE WATER OR PERMANENT STORMWATER TREATMENT SYSTEM.
9. PERMITTEES MUST NOT DISTURB MORE LAND (I.E., PHASING) THAN CAN BE EFFECTIVELY INSPECTED AND MAINTAINED IN ACCORDANCE WITH SECTION 11.

SEDIMENT CONTROL (SECTION 9):

1. PERMITTEES MUST ESTABLISH SEDIMENT CONTROL BMPS ON ALL DOWNGRADIENT PERIMETERS OF THE SITE AND DOWNGRADIENT AREAS OF THE SITE THAT DRAIN TO ANY SURFACE WATER, INCLUDING CURB AND GUTTER SYSTEMS. PERMITTEES MUST LOCATE SEDIMENT CONTROL PRACTICES UPGRADIENT OF ANY BUFFER ZONES. PERMITTEES MUST INSTALL SEDIMENT CONTROL PRACTICES BEFORE ANY UPGRADIENT LAND-DISTURBING ACTIVITIES BEGIN AND MUST KEEP THE SEDIMENT CONTROL PRACTICES IN PLACE UNTIL THEY ESTABLISH PERMANENT COVER.
2. IF DOWNGRADIENT SEDIMENT CONTROLS ARE OVERLOADED, BASED ON FREQUENT FAILURE OR EXCESSIVE MAINTENANCE REQUIREMENTS, PERMITTEES MUST INSTALL ADDITIONAL UPGRADIENT SEDIMENT CONTROL PRACTICES OR REDUNDANT BMPS TO ELIMINATE THE OVERLOADING AND AMEND THE SWPPP TO IDENTIFY THESE ADDITIONAL PRACTICES AS REQUIRED IN ITEM 6.3.
3. TEMPORARY OR PERMANENT DRAINAGE DITCHES AND SEDIMENT BASINS DESIGNED AS PART OF A SEDIMENT CONTAINMENT SYSTEM (E.G., DITCHES WITH ROCK-CHECK DAMS) REQUIRE SEDIMENT CONTROL PRACTICES ONLY AS APPROPRIATE FOR SITE CONDITIONS.
4. A FLOATING SILT CURTAIN PLACED IN THE WATER IS NOT A SEDIMENT CONTROL BMP TO SATISFY ITEM 9.2 EXCEPT WHEN WORKING ON A SHORELINE OR BELOW THE WATERLINE. IMMEDIATELY AFTER THE SHORT TERM CONSTRUCTION ACTIVITY (E.G., INSTALLATION OF RIP RAP ALONG THE SHORELINE) IN THAT AREA IS COMPLETE, PERMITTEES MUST INSTALL AN UPLAND PERIMETER CONTROL PRACTICE IF EXPOSED SOILS STILL DRAIN TO A SURFACE WATER.
5. PERMITTEES MUST RE-INSTALL ALL SEDIMENT CONTROL PRACTICES ADJUSTED OR REMOVED TO ACCOMMODATE SHORT-TERM ACTIVITIES SUCH AS CLEARING OR GRUBBING, OR PASSAGE OF VEHICLES, IMMEDIATELY AFTER THE SHORT-TERM ACTIVITY IS COMPLETED. PERMITTEES MUST RE-INSTALL SEDIMENT CONTROL PRACTICES BEFORE THE NEXT PRECIPITATION EVENT EVEN IF THE SHORT-TERM ACTIVITY IS NOT COMPLETE.
6. PERMITTEES MUST PROTECT ALL STORM DRAIN INLETS USING APPROPRIATE BMPS DURING CONSTRUCTION UNTIL THEY ESTABLISH PERMANENT COVER ON ALL AREAS WITH POTENTIAL FOR DISCHARGING TO THE INLET.
7. PERMITTEES MAY REMOVE INLET PROTECTION FOR A PARTICULAR INLET IF A SPECIFIC SAFETY CONCERN (E.G. STREET FLOODING/FREEZING) IS IDENTIFIED BY THE PERMITTEES OR THE JURISDICTIONAL AUTHORITY (E.G., CITY/COUNTY/TOWNSHIP/MINNESOTA DEPARTMENT OF TRANSPORTATION ENGINEER). PERMITTEES MUST DOCUMENT THE NEED FOR REMOVAL IN THE SWPPP.
8. PERMITTEES MUST PROVIDE SILT FENCE OR OTHER EFFECTIVE SEDIMENT CONTROLS AT THE BASE OF STOCKPILES ON THE DOWNGRADIENT PERIMETER.
9. PERMITTEES MUST LOCATE STOCKPILES OUTSIDE OF NATURAL BUFFERS OR SURFACE WATERS, INCLUDING STORMWATER CONVEYANCES SUCH AS CURB AND GUTTER SYSTEMS UNLESS THERE IS A BYPASS IN PLACE FOR THE STORMWATER.
10. PERMITTEES MUST INSTALL A VEHICLE TRACKING BMP TO MINIMIZE THE TRACK OUT OF SEDIMENT FROM THE CONSTRUCTION SITE OR ONTO PAVED ROADS WITHIN THE SITE.
11. PERMITTEES MUST USE STREET SWEEPING IF VEHICLE TRACKING BMPS ARE NOT ADEQUATE TO PREVENT SEDIMENT TRACKING ONTO THE STREET.
12. PERMITTEES MUST INSTALL TEMPORARY SEDIMENT BASINS AS REQUIRED IN SECTION 14.
13. IN ANY AREAS OF THE SITE WHERE FINAL VEGETATIVE STABILIZATION WILL OCCUR, PERMITTEES MUST RESTRICT VEHICLE AND EQUIPMENT USE TO MINIMIZE SOIL COMPACTION.
14. PERMITTEES MUST PRESERVE TOPSOIL ON THE SITE, UNLESS INFEASIBLE.
15. PERMITTEES MUST DIRECT DISCHARGES FROM BMPS TO VEGETATED AREAS UNLESS INFEASIBLE.
16. PERMITTEES MUST PRESERVE A 50 FOOT NATURAL BUFFER OR, IF A BUFFER IS INFEASIBLE ON THE SITE, PROVIDE REDUNDANT (DOUBLE) PERIMETER SEDIMENT CONTROLS WHEN A SURFACE WATER IS LOCATED WITHIN 50 FEET OF THE PROJECT'S EARTH DISTURBANCES AND STORMWATER FLOWS TO THE SURFACE WATER. PERMITTEES MUST INSTALL PERIMETER SEDIMENT CONTROLS AT LEAST 5 FEET APART UNLESS LIMITED BY LACK OF AVAILABLE SPACE. NATURAL BUFFERS ARE NOT REQUIRED ADJACENT TO ROAD DITCHES, JUDICIAL DITCHES, COUNTY DITCHES, STORMWATER CONVEYANCE CHANNELS, STORM DRAIN INLETS, AND SEDIMENT BASINS. IF PRESERVING THE BUFFER IS INFEASIBLE, PERMITTEES MUST DOCUMENT THE REASONS IN THE SWPPP. SHEET PILING IS A REDUNDANT PERIMETER CONTROL IF INSTALLED IN A MANNER THAT RETAINS ALL STORMWATER.
17. PERMITTEES MUST USE POLYMERS, FLOCCULANTS, OR OTHER SEDIMENTATION TREATMENT CHEMICALS IN ACCORDANCE WITH ACCEPTED ENGINEERING PRACTICES, DOSING SPECIFICATIONS AND SEDIMENT REMOVAL DESIGN SPECIFICATIONS PROVIDED BY THE MANUFACTURER OR SUPPLIER. THE PERMITTEES MUST USE CONVENTIONAL EROSION AND SEDIMENT CONTROLS PRIOR TO CHEMICAL ADDITION AND MUST DIRECT TREATED STORMWATER TO A SEDIMENT CONTROL SYSTEM FOR FILTRATION OR SETTLEMENT OF THE FLOC PRIOR TO DISCHARGE.

DEWATERING AND BASIN DRAINING (SECTION 10):

1. PERMITTEES MUST DISCHARGE TURBID OR SEDIMENT-LADEN WATERS RELATED TO DEWATERING OR BASIN DRAINING (E.G., PUMPED DISCHARGES, TRENCH/DITCH CUTS FOR DRAINAGE) TO A TEMPORARY OR PERMANENT SEDIMENT BASIN ON THE PROJECT SITE UNLESS INFEASIBLE. PERMITTEES MAY DEWATER TO SURFACE WATERS IF THEY VISUALLY CHECK TO ENSURE ADEQUATE TREATMENT HAS BEEN OBTAINED AND NUISANCE CONDITIONS (SEE MINN. R. 7050.0210, SUBP. 2) WILL NOT RESULT FROM THE DISCHARGE. IF PERMITTEES CANNOT DISCHARGE THE WATER TO A SEDIMENTATION BASIN PRIOR TO ENTERING A SURFACE WATER, PERMITTEES MUST TREAT IT WITH APPROPRIATE BMPS SUCH THAT THE DISCHARGE DOES NOT ADVERSELY AFFECT THE SURFACE WATER OR DOWNSTREAM PROPERTIES.
2. IF PERMITTEES MUST DISCHARGE WATER CONTAINING OIL OR GREASE, THEY MUST USE AN OIL-WATER SEPARATOR OR SUITABLE FILTRATION DEVICE (E.G., CARTRIDGE FILTERS, ABSORBENTS PADS) PRIOR TO DISCHARGE.
3. PERMITTEES MUST DISCHARGE ALL WATER FROM DEWATERING OR BASIN-DRAINING ACTIVITIES IN A MANNER THAT DOES NOT CAUSE EROSION OR SCOUR IN THE IMMEDIATE VICINITY OF DISCHARGE POINTS OR INUNDATION OF WETLANDS IN THE IMMEDIATE VICINITY OF DISCHARGE POINTS THAT CAUSES SIGNIFICANT ADVERSE IMPACT TO THE WETLAND.
4. IF PERMITTEES USE FILTERS WITH BACKWASH WATER, THEY MUST HAUL THE BACKWASH WATER AWAY FOR DISPOSAL, RETURN THE BACKWASH WATER TO THE BEGINNING OF THE TREATMENT PROCESS, OR INCORPORATE THE BACKWASH WATER INTO THE SITE IN A MANNER THAT DOES NOT CAUSE EROSION.

INSPECTIONS AND MAINTENANCE (SECTION 11):

1. PERMITTEES MUST ENSURE A TRAINED PERSON, AS IDENTIFIED IN ITEM 21.2.B, WILL INSPECT THE ENTIRE CONSTRUCTION SITE AT LEAST ONCE EVERY SEVEN (7) DAYS DURING ACTIVE CONSTRUCTION AND WITHIN 24 HOURS AFTER A RAINFALL EVENT GREATER THAN 1/2 INCH IN 24 HOURS.
2. PERMITTEES MUST INSPECT AND MAINTAIN ALL PERMANENT STORMWATER TREATMENT BMPS.
3. PERMITTEES MUST INSPECT ALL EROSION PREVENTION AND SEDIMENT CONTROL BMPS AND POLLUTION PREVENTION MANAGEMENT MEASURES TO ENSURE INTEGRITY AND EFFECTIVENESS. PERMITTEES MUST REPAIR, REPLACE OR SUPPLEMENT ALL NONFUNCTIONAL BMPS WITH FUNCTIONAL BMPS BY THE END OF THE NEXT BUSINESS DAY AFTER DISCOVERY UNLESS ANOTHER TIME FRAME IS SPECIFIED IN ITEM 11.5 OR 11.6. PERMITTEES MAY TAKE ADDITIONAL TIME IF FIELD CONDITIONS PREVENT ACCESS TO THE AREA.
4. DURING EACH INSPECTION, PERMITTEES MUST INSPECT SURFACE WATERS, INCLUDING DRAINAGE DITCHES AND CONVEYANCE SYSTEMS BUT NOT CURB AND GUTTER SYSTEMS, FOR EVIDENCE OF EROSION AND SEDIMENT DEPOSITION. PERMITTEES MUST REMOVE ALL DELTAS AND SEDIMENT DEPOSITED IN SURFACE WATERS, INCLUDING DRAINAGE WAYS, CATCH BASINS, AND OTHER DRAINAGE SYSTEMS AND RESTABILIZE THE AREAS WHERE SEDIMENT REMOVAL RESULTS IN EXPOSED SOIL. PERMITTEES MUST COMPLETE REMOVAL AND STABILIZATION WITHIN SEVEN (7) CALENDAR DAYS OF DISCOVERY UNLESS PRECLUDED BY LEGAL, REGULATORY, OR PHYSICAL ACCESS CONSTRAINTS. PERMITTEES MUST USE ALL REASONABLE EFFORTS TO OBTAIN ACCESS. IF PRECLUDED, REMOVAL AND STABILIZATION MUST TAKE PLACE WITHIN SEVEN (7) DAYS OF OBTAINING ACCESS. PERMITTEES ARE RESPONSIBLE FOR CONTACTING ALL LOCAL, REGIONAL, STATE AND FEDERAL AUTHORITIES AND RECEIVING ANY APPLICABLE PERMITS, PRIOR TO CONDUCTING ANY WORK IN SURFACE WATERS.
5. PERMITTEES MUST INSPECT CONSTRUCTION SITE VEHICLE EXIT LOCATIONS, STREETS AND CURB AND GUTTER SYSTEMS WITHIN AND ADJACENT TO THE PROJECT FOR SEDIMENTATION FROM EROSION OR TRACKED SEDIMENT FROM VEHICLES. PERMITTEES MUST REMOVE SEDIMENT FROM ALL PAVED SURFACES WITHIN ONE (1) CALENDAR DAY OF DISCOVERY OR, IF APPLICABLE, WITHIN A SHORTER TIME TO AVOID A SAFETY HAZARD TO USERS OF PUBLIC STREETS.
6. PERMITTEES MUST REPAIR, REPLACE OR SUPPLEMENT ALL PERIMETER CONTROL DEVICES WHEN THEY BECOME NONFUNCTIONAL OR THE SEDIMENT REACHES 1/2 OF THE HEIGHT OF THE DEVICE.
7. PERMITTEES MUST DRAIN TEMPORARY AND PERMANENT SEDIMENTATION BASINS AND REMOVE THE SEDIMENT WHEN THE DEPTH OF SEDIMENT COLLECTED IN THE BASIN REACHES 1/2 THE STORAGE VOLUME.
8. PERMITTEES MUST ENSURE THAT AT LEAST ONE INDIVIDUAL PRESENT ON THE SITE (OR AVAILABLE TO THE PROJECT SITE IN THREE (3) CALENDAR DAYS) IS TRAINED IN THE JOB DUTIES DESCRIBED IN ITEM 21.2.B.
9. PERMITTEES MAY ADJUST THE INSPECTION SCHEDULE DESCRIBED IN ITEM 11.2 AS FOLLOWS:
   - a. INSPECTIONS OF AREAS WITH PERMANENT COVER CAN BE REDUCED TO ONCE PER MONTH, EVEN IF CONSTRUCTION ACTIVITY CONTINUES ON OTHER PORTIONS OF THE SITE; OR
   - b. WHERE SITES HAVE PERMANENT COVER ON ALL EXPOSED SOIL AND NO CONSTRUCTION ACTIVITY IS OCCURRING ANYWHERE ON THE SITE, INSPECTIONS CAN BE REDUCED TO ONCE PER MONTH AND, AFTER 12 MONTHS, MAY BE SUSPENDED COMPLETELY UNTIL CONSTRUCTION ACTIVITY RESUMES. THE MPCA MAY REQUIRE INSPECTIONS TO RESUME IF CONDITIONS WARRANT; OR
   - c. WHERE CONSTRUCTION ACTIVITY HAS BEEN SUSPENDED DUE TO FROZEN GROUND CONDITIONS, INSPECTIONS MAY BE SUSPENDED. INSPECTIONS MUST RESUME WITHIN 24 HOURS OF RUNOFF OCCURRING, OR UPON RESUMING CONSTRUCTION, WHICHEVER COMES FIRST.
10. PERMITTEES MUST RECORD ALL INSPECTIONS AND MAINTENANCE ACTIVITIES WITHIN 24 HOURS OF BEING CONDUCTED AND THESE RECORDS MUST BE RETAINED WITH THE SWPPP. THESE RECORDS MUST INCLUDE:
    - a. DATE AND TIME OF INSPECTIONS; AND
    - b. NAME OF PERSONS CONDUCTING INSPECTIONS; AND
    - c. ACCURATE FINDINGS OF INSPECTIONS, INCLUDING THE SPECIFIC LOCATION WHERE CORRECTIVE ACTIONS ARE NEEDED; AND
    - d. CORRECTIVE ACTIONS TAKEN (INCLUDING DATES, TIMES, AND PARTY COMPLETING MAINTENANCE ACTIVITIES); AND
    - e. DATE OF ALL RAINFALL EVENTS GREATER THAN 1/2 INCHES IN 24 HOURS, AND THE AMOUNT OF RAINFALL FOR EACH EVENT. PERMITTEES MUST OBTAIN RAINFALL AMOUNTS BY EITHER A PROPERLY MAINTAINED RAIN GAUGE INSTALLED ONSITE, A WEATHER STATION THAT IS WITHIN ONE (1) MILE OF YOUR LOCATION, OR A WEATHER REPORTING SYSTEM THAT PROVIDES SITE SPECIFIC RAINFALL DATA FROM RADAR SUMMARIES; AND
    - f. IF PERMITTEES OBSERVE A DISCHARGE DURING THE INSPECTION, THEY MUST RECORD AND SHOULD PHOTOGRAPH AND DESCRIBE THE LOCATION OF THE DISCHARGE (I.E., COLOR, ODOR, SETTLED OR SUSPENDED SOLIDS, OIL SHEEN, AND OTHER OBVIOUS INDICATORS OF POLLUTANTS); AND
    - g. ANY AMENDMENTS TO THE SWPPP PROPOSED AS A RESULT OF THE INSPECTION MUST BE DOCUMENTED AS REQUIRED IN SECTION 6 WITHIN SEVEN (7) CALENDAR DAYS.

POLLUTION PREVENTION MANAGEMENT (SECTION 12):

1. PERMITTEES MUST PLACE BUILDING PRODUCTS AND LANDSCAPE MATERIALS UNDER COVER (E.G., PLASTIC SHEETING OR TEMPORARY ROOFS) OR PROTECT THEM BY SIMILARLY EFFECTIVE MEANS DESIGNED TO MINIMIZE CONTACT WITH STORMWATER. PERMITTEES ARE NOT REQUIRED TO COVER OR PROTECT PRODUCTS WHICH ARE EITHER NOT A SOURCE OF CONTAMINATION TO STORMWATER OR ARE DESIGNED TO BE EXPOSED TO STORMWATER.
2. PERMITTEES MUST PLACE PESTICIDES, FERTILIZERS AND TREATMENT CHEMICALS UNDER COVER (E.G., PLASTIC SHEETING OR TEMPORARY ROOFS) OR PROTECT THEM BY SIMILARLY EFFECTIVE MEANS DESIGNED TO MINIMIZE CONTACT WITH STORMWATER.
3. PERMITTEES MUST STORE HAZARDOUS MATERIALS AND TOXIC WASTE, (INCLUDING OIL, DIESEL FUEL, GASOLINE, HYDRAULIC FLUIDS, PAINT SOLVENTS, PETROLEUM-BASED PRODUCTS, WOOD PRESERVATIVES, ADDITIVES, CURING COMPOUNDS, AND ACIDS) IN SEALED CONTAINERS TO PREVENT SPILLS, LEAKS OR OTHER DISCHARGE. STORAGE AND DISPOSAL OF HAZARDOUS WASTE MATERIALS MUST BE IN COMPLIANCE WITH MINN. R. CH. 7045 INCLUDING SECONDARY CONTAINMENT AS APPLICABLE.
4. PERMITTEES MUST PROPERLY STORE, COLLECT AND DISPOSE SOLID WASTE IN COMPLIANCE WITH MINN. R. CH. 7035.
5. PERMITTEES MUST POSITION PORTABLE TOILETS SO THEY ARE SECURE AND WILL NOT TIP OR BE KNOCKED OVER. PERMITTEES MUST PROPERLY DISPOSE SANITARY WASTE IN ACCORDANCE WITH MINN. R. CH. 7041.
6. PERMITTEES MUST TAKE REASONABLE STEPS TO PREVENT THE DISCHARGE OF SPILLED OR LEAKED CHEMICALS, INCLUDING FUEL, FROM ANY AREA WHERE CHEMICALS OR FUEL WILL BE LOADED OR UNLOADED INCLUDING THE USE OF DRIP PANS OR ABSORBENTS UNLESS INFEASIBLE. PERMITTEES MUST ENSURE ADEQUATE SUPPLIES ARE AVAILABLE AT ALL TIMES TO CLEAN UP DISCHARGED MATERIALS AND THAT AN APPROPRIATE DISPOSAL METHOD IS AVAILABLE FOR RECOVERED SPILLED MATERIALS. PERMITTEES MUST REPORT AND CLEAN UP SPILLS IMMEDIATELY AS REQUIRED BY MINN. STAT. 115.061, USING DRY CLEAN UP MEASURES WHERE POSSIBLE.
7. PERMITTEES MUST LIMIT VEHICLE EXTERIOR WASHING AND EQUIPMENT TO A DEFINED AREA OF THE SITE. PERMITTEES MUST CONTAIN RUNOFF FROM THE WASHING AREA IN A SEDIMENT BASIN OR OTHER SIMILARLY EFFECTIVE CONTROLS AND MUST DISPOSE WASTE FROM THE WASHING ACTIVITY PROPERLY. PERMITTEES MUST PROPERLY USE AND STORE SOAPS, DETERGENTS, OR SOLVENTS.
8. PERMITTEES MUST PROVIDE EFFECTIVE CONTAINMENT FOR ALL LIQUID AND SOLID WASTES GENERATED BY WASHOUT OPERATIONS (E.G., CONCRETE, STUCCO, PAINT, FORM RELEASE OILS, CURING COMPOUNDS AND OTHER CONSTRUCTION MATERIALS) RELATED TO THE CONSTRUCTION ACTIVITY. PERMITTEES MUST PREVENT LIQUID AND SOLID WASHOUT WASTES FROM CONTACTING THE GROUND AND MUST DESIGN THE CONTAINMENT SO IT DOES NOT RESULT IN RUNOFF FROM THE WASHOUT OPERATIONS OR AREAS. PERMITTEES MUST PROPERLY DISPOSE LIQUID AND SOLID WASTES IN COMPLIANCE WITH MPCA RULES. PERMITTEES MUST INSTALL A SIGN INDICATING THE LOCATION OF THE WASHOUT FACILITY.

PERMIT TERMINATION (SECTION 4 AND SECTION 13):

1. PERMITTEES MUST SUBMIT A NOT WITHIN 30 DAYS AFTER ALL TERMINATION CONDITIONS LISTED IN SECTION 13 ARE COMPLETE.
2. PERMITTEES MUST SUBMIT A NOT WITHIN 30 DAYS AFTER SELLING OR OTHERWISE LEGALLY TRANSFERRING THE ENTIRE SITE, INCLUDING PERMIT RESPONSIBILITY FOR ROADS (E.G., STREET SWEEPING) AND STORMWATER INFRASTRUCTURE FINAL CLEAN OUT, OR TRANSFERRING PORTIONS OF A SITE TO ANOTHER PARTY. THE PERMITTEES' COVERAGE UNDER THIS PERMIT TERMINATES AT MIDNIGHT ON THE SUBMISSION DATE OF THE NOT.
3. PERMITTEES MUST COMPLETE ALL CONSTRUCTION ACTIVITY AND MUST INSTALL PERMANENT COVER OVER ALL AREAS PRIOR TO SUBMITTING THE NOT. VEGETATIVE COVER MUST CONSIST OF A UNIFORM PERENNIAL VEGETATION WITH A DENSITY OF 70 PERCENT OF ITS EXPECTED FINAL GROWTH. VEGETATION IS NOT REQUIRED WHERE THE FUNCTION OF A SPECIFIC AREA DICTATES NO VEGETATION, SUCH AS IMPERVIOUS SURFACES OR THE BASE OF A SAND FILTER.
4. PERMITTEES MUST CLEAN THE PERMANENT STORMWATER TREATMENT SYSTEM OF ANY ACCUMULATED SEDIMENT AND MUST ENSURE THE SYSTEM MEETS ALL APPLICABLE REQUIREMENTS IN SECTION 15 THROUGH 19 AND IS OPERATING AS DESIGNED.
5. PERMITTEES MUST REMOVE ALL SEDIMENT FROM CONVEYANCE SYSTEMS PRIOR TO SUBMITTING THE NOT.
6. PERMITTEES MUST REMOVE ALL TEMPORARY SYNTHETIC EROSION PREVENTION AND SEDIMENT CONTROL BMPS PRIOR TO SUBMITTING THE NOT. PERMITTEES MAY LEAVE BMPS DESIGNED TO DECOMPOSE ON-SITE IN PLACE.
7. FOR RESIDENTIAL CONSTRUCTION ONLY, PERMIT COVERAGE TERMINATES ON INDIVIDUAL LOTS IF THE STRUCTURES ARE FINISHED AND TEMPORARY EROSION PREVENTION AND DOWNGRADIENT PERIMETER CONTROL IS COMPLETE, THE RESIDENCE SELLS TO THE HOMEOWNER, AND THE PERMITTEE DISTRIBUTES THE MPCA'S "HOMEOWNER FACT SHEET" TO THE HOMEOWNER.
8. FOR CONSTRUCTION PROJECTS ON AGRICULTURAL LAND (E.G., PIPELINES ACROSS CROPLAND), PERMITTEES MUST RETURN THE DISTURBED LAND TO ITS PRECONSTRUCTION AGRICULTURAL USE PRIOR TO SUBMITTING THE NOT.

SEED NOTES:

ALL SEED MIXES AND APPLICATION SHALL BE IN ACCORDANCE WITH THE MNDOT SEEDING MANUAL.

GENERAL RECOMMENDATIONS:
THE CONTRACTOR IS RESPONSIBLE TO SALVAGE AND PRESERVE EXISTING TOPSOIL NECESSARY FOR FINAL STABILIZATION AND TO ALSO MINIMIZE COMPACTION IN ALL LANDSCAPE AREAS. IMMEDIATELY BEFORE SEEDING THE SOIL SHALL BE TILLED TO A MINIMUM DEPTH OF 3 INCHES.

TEMPORARY EROSION CONTROL SEEDING, MULCHING & BLANKET.

SEED
- TEMPORARY SEED SHALL BE MNDOT SEED MIX 21-112 (WINTER WHEAT COVER CROP) FOR WINTER AND 21-111 (OATS COVER CROP) FOR SPRING/SUMMER APPLICATIONS. BOTH SEED MIXES SHALL BE APPLIED AT A SEEDING RATE OF 100 LBS/ACRE.

MULCH
- IMMEDIATELY AFTER SEEDING, WITHIN 24 HOURS, MNDOT TYPE 1 MULCH SHOULD BE APPLIED TO PROTECT AND ENHANCE SEED GERMINATION. MULCH SHALL BE APPLIED AT 90% COVERAGE (2 TONS PER ACRE OF STRAW MULCH)

SLOPES
- 3:1 (HORIZ/VERT.) OR FLATTER MUCH SHALL BE COVERED WITH MULCH
- SLOPES STEEPER THAN 3:1 OR DITCH BOTTOMS SHALL BE COVERED WITH EROSION CONTROL BLANKET.
- SEE PLAN FOR MORE DETAILED DITCH AND STEEP SLOPE EROSION CONTROL TREATMENTS.

TRAINING SECTION 21

DESIGN ENGINEER: DAVID J. KNAEBLE P.E.
TRAINING COURSE: DESIGN OF SWPPP
TRAINING ENTITY: UNIVERSITY OF MINNESOTA
INSTRUCTOR: JOHN CHAPMAN
DATES OF TRAINING COURSE: 8/22/2012- 8/23/2012
TOTAL TRAINING HOURS: 12
DATE OF RECERTIFICATION: 1/3/2025
EXPIRATION: 5/31/2028

OWNER INFORMATION

VELAIR DEVELOPMENT COMPANY
7645 LYNDALE AVE SOUTH #300
MINNEAPOLIS, MN, 55423
MARTY O'CONNELL
612-243-4623
MARTYOCONNELL@VELAIRDC.COM

AREAS AND QUANTITIES:

SITE AREA CALCULATIONS	EXISTING CONDITION			PROPOSED CONDITION		
IMPERVIOUS SURFACES						
BUILDING COVERAGE	120 SF	0.1%		25,646 SF	22.8%	
PAVEMENT	82,322 SF	73.2%		44,853 SF	39.9%	
TOTAL	82,442 SF	73.3%	1.9 AC	70,499 SF	62.7%	1.6 AC
PERVIOUS SURFACES						
TOTAL	30,079 SF	26.7%	0.7 AC	42,022 SF	37.3%	1.0 AC
TOTAL SITE AREA	112,521 SF	100.0%	2.6 AC	112,521 SF	100.0%	2.6 AC
DIFFERENCE (EX. VS PROP.)	-11,943 SF	-10.6%				
DISTURBED AREA	88,935 SF	2.0 AC				

EROSION CONTROL QUANTITIES	
DISTURBED AREA	88,935 SF
SILT FENCE/BIO-ROLL	1,400 LF
EROSION CONTROL BLANKET	12,000 SF
INLET PROTECTION DEVICES	±8 EA

NOTE: QUANTITIES ARE FOR INFORMATIONAL PURPOSES ONLY. CONTRACTOR SHALL DETERMINE FOR THEMSELVES THE EXACT QUANTITIES FOR BIDDING AND CONSTRUCTION.

SWPPP CONTACT PERSON

CONTRACTOR:

SWPPP INSPECTOR TRAINING:
ALL SWPPP INSPECTIONS MUST BE PERFORMED BY A PERSON THAT MEETS THE TRAINING REQUIREMENTS OF THE NPDES CONSTRUCTION SITE PERMIT.
TRAINING CREDENTIALS SHALL BE PROVIDED BY THE CONTRACTOR AND KEPT ON SITE WITH THE SWPPP

PARTY RESPONSIBLE FOR LONG TERM OPERATION AND MAINTENANCE OF PERMANENT STORM WATER MANAGEMENT SYSTEM

PERMANENT STORMWATER MANAGEMENT IS NOT REQUIRED AS PART OF THIS PROJECT TO MEET NPDES PERMIT REQUIREMENTS. THE PROPERTY OWNER IS RESPONSIBLE FOR THE LONG TERM OPERATION AND MAINTENANCE OF THE PROPOSED STORMWATER SYSTEM THAT IS REQUIRED BY THE CITY AND WATERSHED.

SWPPP ATTACHMENTS (ONLY APPLICABLE IF SITE IS 1 ACRE OR GREATER):

CONTRACTOR SHALL OBTAIN A COPY OF THE FOLLOWING SWPPP ATTACHMENTS WHICH ARE A PART OF THE OVERALL SWPPP PACKAGE:
ATTACHMENT A. CONSTRUCTION SWPPP TEMPLATE - SITE SPECIFIC SWPPP DOCUMENT
ATTACHMENT B. CONSTRUCTION STORMWATER INSPECTION CHECKLIST
ATTACHMENT C. MAINTENANCE PLAN FOR PERMANENT STORM WATER TREATMENT SYSTEMS
ATTACHMENT D: STORMWATER MANAGEMENT REPORT - ON FILE AT THE OFFICE OF PROJECT ENGINEER. AVAILABLE UPON REQUEST.
ATTACHMENT E: GEOTECHNICAL EVALUATION REPORT - ON FILE AT THE OFFICE OF PROJECT ENGINEER. AVAILABLE UPON REQUEST.

SUPPLEMENTARY SITE SPECIFIC EROSION CONTROL NOTES:

THESE NOTES SUPERCEDE ANY GENERAL SWPPP NOTES.

THIS PROJECT IS GREATER THAN 1.0 ACRES SO AN NPDES PERMIT IS REQUIRED AND NEEDS TO BE SUBMITTED TO THE MPCA. THE CONTRACTOR IS REQUIRED TO FOLLOW THE GUIDELINES IN THE NPDES PERMIT THROUGHOUT CONSTRUCTION.

PROJECT NARRATIVE:

PROJECT IS A REDEVELOPMENT OF AN EXISTING PARKING LOT INTO AN APARTMENT BUILDING. SITE, GRADING, UTILITY AND LANDSCAPE IMPROVEMENTS WILL OCCUR.

NATIVE BUFFER NARRATIVE:

PRESERVING A 50 FOOT NATURAL BUFFER AROUND WATER BODIES IS NOT REQUIRED OF THIS PROJECT BECAUSE WATER BODIES ARE NOT LOCATED ON SITE.

INFILTRATION NARRATIVE:

INFILTRATION IS PROVIDED AS PART OF THE PROJECTS PERMANENT STORM WATER MANAGEMENT SYSTEM.

SOIL CONTAMINATION NARRATIVE:

SOILS ONSITE HAVE NOT BEEN IDENTIFIED AS CONTAMINATED.

SPECIAL TMDL BMP REQUIREMENTS SITE SPECIFIC (IF REQUIRED):

THIS PROJECT IS NOT LOCATED WITHIN ONE MILE OR DISCHARGING TO AN IDENTIFIED IMPAIRED WATER BODY PER THE MPCA'S 303(D) IMPAIRED WATERS LIST.

CivilSite GROUP
Civil Engineering ° Surveying ° Landscape Architecture
5000 Glenwood Avenue
Golden Valley, MN 55422
civilsitegroup.com 612-615-0060

PRELIMINARY: NOT FOR CONSTRUCTION

PROJECT
FAIRWAY COMMONS APARTMENTS
1644 LARPENTEUR AVE W, FALCON HEIGHTS, MN 55113

OWNER
VELAIR DEVELOPMENT COMPANY
7645 LYNDALE AVE SOUTH #300, MINNEAPOLIS, MN, 55423

I HEREBY CERTIFY THAT THIS PLAN, SPECIFICATION, OR REPORT WAS PREPARED BY ME OR UNDER MY DIRECT SUPERVISION AND THAT I AM A DULY LICENSED PROFESSIONAL ENGINEER UNDER THE LAWS OF THE STATE OF MINNESOTA.

David J. Knaeble
DATE 03/02/2026 LICENSE NO. 48776

ISSUE/SUBMITTAL SUMMARY

DATE	DESCRIPTION
03/02/2026	CITY SUBMITTAL

PROJECT MANAGER	DAVID KNAEBLE
CONTACT NUMBER	612-615-0060
DRAWN BY	BN
REVIEWED BY	DK
PROJECT NUMBER	25503

REVISION SUMMARY

DATE	DESCRIPTION

SWPPP - NARRATIVE

SW1.3

© COPYRIGHT 2026 CIVIL SITE GROUP INC.

ATTACHMENT A: SITE SPECIFIC SWPPP DOCUMENT

PROJECT LOCATION			
ADDRESS	1644 LARPENTEUR AVE W	CITY/TOWNSHIP	FALCON HEIGHTS
STATE	MN	COUNTY	RAMSEY
ZIP CODE	55113	PROJECT SIZE	1.8 ACRES
LATTITUDE/LONGITUDE OF APPROX. CENTROID OF PROJECT		44.991319 N, 93.170081 W	
METHOD OF LAT/LONG COLLECTION		ONLINE TOOL	
PROJECT TYPE		RESIDENTIAL	
IMPERVIOUS SURFACES (ACRES)			
EXISTING		1.9	
PROPOSED		1.7	
DIFFERENCE		0.2	
ESTIMATED CONSTRUCTION TIMELINE			
START	06/2024	END	11/2028
CONSTRUCTION ACTIVITY		APARTMENT BUILDING	
SOIL TYPES			

SOILS INFORMATION

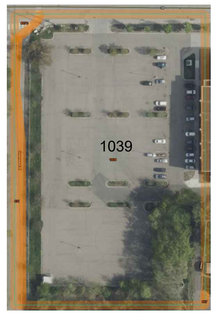

MAP UNIT SYMBOL	MAP UNIT NAME
1039	URBAN LAND

RECEIVING WATER BODIES					
	WATER BODY ID	NAME OF WATER BODY	WATER BODY TYPE	SPECIAL WATER (Y/N)	IMPAIRED WATER (Y/N)
1					
2					
3					
4					

SITE LOCATION MAP -

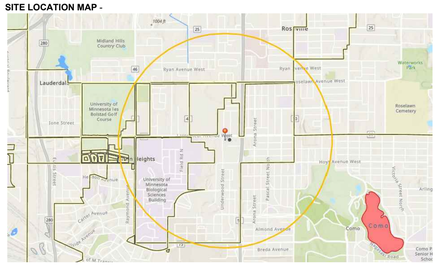

GENERAL SITE INFORMATION (5.1)
1. DESCRIBE THE LOCATION AND TYPE OF ALL TEMPORARY AND PERMANENT EROSION PREVENTION AND SEDIMENT CONTROL BEST MANAGEMENT PRACTICES (BMP'S). INCLUDE THE TIMING FOR INSTALLATION AND PROCEDURES USED TO ESTABLISH ADDITIONAL TEMPORARY BMP'S AS NECESSARY. (5.5)
THE PROJECT IS PROTECTED BY TWO (W) MAIN BMP'S, SILT FENCE AND INLET PROTECTION DEVICES. THE SILT FENCE WILL BE INSTALLED AT THE DOWNHILL LOCATIONS OF THE SITE AND MONITORED AS NECESSARY. INLET PROTECTION DEVICES WILL BE INSTALLED IN ALL CATCH BASINS ON THE SITE AND ANY OFF SITE THAT WILL RECEIVE STORMWATER RUNOFF FROM THIS SITE. AS THE PROJECT PROGRESSES ADDITIONAL BMP'S SUCH AS EROSION CONTROL BLANKET MAY BE UTILIZED.
2. ATTACH TO THIS SWPPP A TABLE WITH THE ANTICIPATED QUANTITIES FOR THE LIFE OF THE PROJECT FOR ALL EROSION PREVENTION AND SEDIMENT CONTROL BMP'S (5.7).
SEE PAGE SW1.3
3. ATTACH TO THIS SWPPP A SITE MAP THAT INCLUDES THE FOLLOWING FEATURES (5.9):
EXIST AND FINAL GRADES, INCLUDING DIVIDING LINES AND DIRECTION OF FLOW FOR ALL PRE AND POST-CONSTRUCTION STORMWATER RUNOFF DRAINAGE AREAS LOCATED WITHIN THE PROJECT LIMITS.

LOCATIONS OF IMPERVIOUS SURFACES AND SOIL TYPES.
- EXISTING AND FINAL GRADES, INCLUDING DIVIDING LINES AND DIRECTION OF FLOW FOR ALL PRE AND POST-CONSTRUCTION STORMWATER RUNOFF DRAINAGE AREAS LOCATED WITHIN PROJECT LIMITS.
- LOCATIONS OF AREAS NOT TO BE DISTURBED.
- LOCATION OF AREAS OF PHASED CONSTRUCTION.
- ALL SURFACE WATERS AND EXISTING WETLANDS WITHIN ONE MILE FROM THE PROJECT BOUNDARIES THAT WILL RECEIVE STORMWATER RUNOFF FROM THE SITE (IDENTIFIABLE ON MAPS SUCH AS USGS 7.5 MINUTE QUADRANGLE MAPS OR EQUIVALENT. WHERE SURFACE WATERS RECEIVING RUNOFF ASSOCIATED WITH CONSTRUCTION ACTIVITY WILL NOT FIT ON THE PLAN SHEET, THEY MUST BE IDENTIFIED WITH AN ARROW, INDICATING BOTH DIRECTION AND DISTANCE TO THE SURFACE WATER.
- METHODS TO BE USED FOR FINAL STABILIZATION OF ALL EXPOSED SOIL AREA

4. WERE STORMWATER MITIGATION MEASURES REQUIRED AS THE RESULT OF AN ENVIRONMENTAL, ARCHAEOLOGICAL, OR OTHER REQUIRED LOCAL, STATE OR FEDERAL REVIEW OF THE PROJECT?
NO
IF YES, DESCRIBE HOW THESE MEASURES WERE ADDRESSED IN THE SWPPP. (5.16)
N/A
5. IS THE PROJECT LOCATED IN A KARST AREA SUCH THAT ADDITIONAL MEASURES WOULD BE NECESSARY TO PROJECT DRINKING WATER SUPPLY MANAGEMENT AREAS AS DESCRIBED IN MINN. R. CHAPTERS 7050 AND 7060?
NO
IF YES, DESCRIBE THE ADDITIONAL MEASURES TO BE USED. (SECTION 23)
N/A
6. DOES THE SITE DISCHARGE TO A CALCEREOUS FEN LISTED IN MINN. R. 7050.0180, SUBP. 6.B?
NO
IF YES, A LETTER OF APPROVAL FROM THE MINNESOTA DEPARTMENT OF NATURAL RESOURCES MUST BE OBTAINED PRIOR TO APPLICATION FOR THIS PERMIT.
7. DOES THE SITE DISCHARGE TO A WATER THAT IS LISTED AS IMPAIRED FOR THE FOLLOWING POLLUTANT(S) OR STRESSOR(S): PHOSPHORUS, TURBIDITY, DISSOLVED OXYGEN OR BIOTIC IMPAIRMENT? USE THE SPECIAL AND IMPAIRED WATERS SEARCH TOOL AT: WWW.PCA.STATE.MN.US/WATER/STORMWATER/STORMWATER-C.HTML
NO
IF NO, SKIP TO TRAINING
DOES THE IMPAIRED WATER HAVE AN APPROVED TOTAL MAXIMUM DAILY LOADS (TMDL) WITH AN APPROVED WASTE LOAD ALLOCATION FOR CONSTRUCTION ACTIVITY?
N/A
IF YES:
A. LIST THE RECEIVING WATER, THE AREAS OF THE SITE DISCHARGING TO IT, AND THE POLLUTANT(S) IDENTIFIED IN THE TMDL.
B. LIST THE BMP'S AND ANY OTHER SPECIFIC CONSTRUCTION STORMWATER RELATED IMPLEMENTATION ACTIVITIES IDENTIFIED IN THE TMDL.

IF THE SITE HAS A DISCHARGE POINT WITHIN ONE MILE OF THE IMPAIRED WATER AND THE WATER FLOWS TO THE IMPAIRED WATER BUT NO SPECIFIC BMPS FOR CONSTRUCTION ARE IDENTIFIED IN THE TMDL, THE ADDITIONAL BMPS IN SECTION 23 MUST BE ADDED TO THE SWPPP AND IMPLEMENTED (15.19). THE ADDITIONAL BMPS ONLY APPLY TO THOSE PORTIONS OF THE PROJECT THAT DRAIN TO ONE OF THE IDENTIFIED DISCHARGE POINTS.
N/A
8. IDENTIFY ADJACENT PUBLIC WATERS WHERE THE MINNESOTA DEPARTMENT OF NATURAL RESOURCES (DNR) HAS DECLARED "WORK IN WATER RESTRICTIONS" DURING FISH SPAWNING TIMEFRAMES
N/A

SELECTION OF A PERMANENT STORMWATER MANAGEMENT SYSTEM (SECTION 15)
1. WILL THE PROJECT CREATE A NEW CUMULATIVE IMPERVIOUS SURFACE GREATER THAN OR EQUAL TO ONE ACRE?
NO
IF YES, A WATER QUALITY VOLUME OF ONE INCH OF RUNOFF FROM THE CUMULATIVE NEW IMPERVIOUS SURFACES MUST BE RETAINED ON SITE (SEE 16.7 OF THE PERMIT) THROUGH INFILTRATION UNLESS PROHIBITED DUE TO ONE OF THE REASONS IN ITEMS 16.4 THROUGH 16.21. IF INFILTRATION IS PROHIBITED IDENTIFY OTHER METHOD OF MEETING WATER QUALITY REQUIREMENTS (E.G., FILTRATION SYSTEM, WET SEDIMENTATION BASIN, REGIONAL PONDING OR EQUIVALENT METHOD
2. DESCRIBE WHICH METHOD WILL BE USED TO TREAT RUNOFF FROM THE NEW IMPERVIOUS SURFACES CREATED BY THE PROJECT:

INCLUDE ALL CALCULATIONS AND DESIGN INFORMATION FOR THE METHOD SELECTED. SEE SECTION 23 OF THE PERMIT FOR SPECIFIC REQUIREMENTS ASSOCIATED WITH EACH METHOD.

INFILTRATION / REGIONAL PONDING

CALCULATIONS ARE WITHIN THE SITE STORM WATER MANAGEMENT REPORT AND PART OF THIS SWPPP AS ATTACHMENT D.

3. IF IT IS NOT FEASIBLE TO MEET THE TREATMENT REQUIREMENT FOR THE WATER QUALITY VOLUME, DESCRIBE WHY. THIS CAN INCLUDE PROXIMITY TO BEDROCK OR ROAD PROJECTS WHERE THE LACK OF RIGHT OF WAY PRECLUDES THE INSTALLATION OF ANY PERMANENT STORMWATER MANAGEMENT PRACTICES. DESCRIBE WHAT OTHER TREATMENT, SUCH AS GRASS SWALES, SMALLER PONDS, OR GRIT CHAMBERS, WILL BE IMPLEMENTED TO TREAT RUNOFF PRIOR TO DISCHARGE TO SURFACE WATERS. (15.8)
N/A
4. FOR PROJECTS THAT DISCHARGE TO TROUT STREAMS, INCLUDING TRIBUTARIES TO TROUT STREAMS, IDENTIFY METHOD OF INCORPORATING TEMPERATURE CONTROLS INTO THE PERMANENT STORMWATER MANAGEMENT SYSTEM.
N/A

EROSION PREVENTION PRACTICES (SECTION 8.1)
DESCRIBE THE TYPES OF TEMPORARY EROSION PREVENTION BMP'S EXPECTED TO BE IMPLEMENTED ON THIS SITE DURING CONSTRUCTION:
1. DESCRIBE CONSTRUCTION PHASING, VEGETATIVE BUFFER STRIPS, HORIZONTAL SLOPE GRADING, AND OTHER CONSTRUCTION PRACTICES TO MINIMIZE EROSION. DELINEATE AREAS NOT TO BE DISTURBED (E.G., WITH FLAGS, STAKES, SIGNS, SILT FENCE, ETC.) BEFORE WORK BEGINS.
SILT FENCE WILL BE INSTALLED AT THE DOWNHILL LOCATIONS OF THE SITE.
2. DESCRIBE METHODS OF TEMPORARILY STABILIZING SOILS AND SOIL STOCKPILES (E.G., MULCHES, HYDRAULIC TACKIFIERS, EROSION BLANKETS, ETC.):
TEMPORARY EROSION PROTECTION WILL BE SEED AND MULCH AND EROSION BLANKETS WHERE REQUIRED, WITH PERMANENT COVER BEING EITHER SOD OR LANDSCAPE FEATURES.
3. DESCRIBE METHODS OF DISSIPATING VELOCITY ALONG STORMWATER CONVEYANCE CHANNELS AND AT CHANNEL OUTLETS (E.G., CHECK DAMS, SEDIMENT TRAPS, RIP RAP, ETC.):
SOD WILL BE UTILIZED ALONG CHANNELS AND RIP RAP AT CHANNEL.
4. DESCRIBE METHODS TO BE USED FOR STABILIZATION OF DITCH AND SWALE WETTED PERIMETERS (NOTE THAT MULCH, HYDRAULIC SOIL TACKIFIERS, HYDROMULCHES, ETC. ARE NOT ACCEPTABLE SOIL STABILIZATION METHODS FOR ANY PART OF A DRAINAGE DITCH OR SWALE)
FINAL STABILIZATION OF SWALES WILL BE SOD
5. DESCRIBE METHODS TO BE USED FOR ENERGY DISSIPATION AT PIPE OUTLETS (E.G., RIP RAP, SPLASH PADS, GABIONS, ETC.)
RIP RAP WILL BE UTILIZED AT PIPE OUTLETS
6. DESCRIBE METHODS TO BE USED TO PROMOTE INFILTRATION AND SEDIMENT REMOVAL ON THE SITE PRIOR TO OFFSITE DISCHARGE, UNLESS INFEASIBLE (E.G., DIRECT STORMWATER FLOW TO VEGETATED AREAS): DISCONNECTED IMPERVIOUS AREA AND INFILTRATION AREAS WILL BE UTILIZED
7. FOR DRAINAGE OR DIVERSION DITCHES, DESCRIBE PRACTICES TO STABILIZE THE NORMAL WETTED PERIMETER WITHIN 200 LINEAL FEET OF THE PROPERTY EDGE OR POINT OF DISCHARGE TO SURFACE WATER. THE LAST 200 LINEAL FEET MUST BE STABILIZED WITHIN **24 HOURS** AFTER CONNECTING TO SURFACE WATERS AND CONSTRUCTION IN THAT PORTION OF THE DITCH HAS TEMPORARILY OR PERMANENTLY CEASED FOR ALL DISCHARGES TO SPECIAL, IMPAIRED OR "WORK IN WATER RESTRICTIONS". ALL OTHER REMAINING PORTIONS OF THE TEMPORARY OR PERMANENT DITCHES OR SWALES WITHIN 14 CALENDAR DAYS AFTER CONNECTING TO A SURFACE WATER, PROPERTY EDGE AND CONSTRUCTION IN THAT AREA HAS TEMPORARILY OR PERMANENTLY CEASED.
N/A, NO DITCHES ON SITE
8. DESCRIBE ADDITIONAL EROSION PREVENTION MEASURES THAT WILL BE IMPLEMENTED AT THE SITE DURING CONSTRUCTION (E.G., CONSTRUCTION PHASING, MINIMIZING SOIL DISTURBANCE, VEGETATIVE BUFFERS, HORIZONTAL SLOPE GRADING, SLOPE DRAINING/TERRACING, ETC.):
OTHER EROSION CONTROL PRACTICES INCLUDE BUT ARE NOT LIMITED TO; MINIMIZING SITE EXPOSURE WHEN POSSIBLE.
9. IF APPLICABLE, INCLUDE ADDITIONAL REQUIREMENTS IN APPENDIX A PART C.3 REGARDING MAINTAINING A 100-FOOT BUFFER ZONE OR INSTALLING REDUNDANT BMPS FOR PORTIONS OF THE SITE THAT DRAIN TO SPECIAL WATERS).
N/A
10. IF APPLICABLE, DESCRIBE ADDITIONAL EROSION PREVENTION BMPS TO BE IMPLEMENTED AT THE SITE TO PROTECT PLANNED FILTRATION AREAS
MINIMIZE SITE EXPOSURE IN AREAS ADJACENT TO FILTRATION AREAS.

SEDIMENT CONTROL PRACTICES (SECTION 9.1)
DESCRIBE THE METHODS OF SEDIMENT CONTROL BMPS TO BE IMPLEMENTED AT THIS SITE DURING CONSTRUCTION TO MINIMIZE SEDIMENT IMPACTS TO SURFACE WATERS, INCLUDING CURB AND GUTTER SYSTEMS
1. DESCRIBE METHODS TO BE USED FOR DOWN GRADIENT PERIMETER CONTROL:
SILT FENCE WILL BE INSTALLED AROUND THE ENTIRE PERIMETER OF THE SITE
2. DESCRIBE METHODS TO BE USED TO CONTAIN SOIL STOCKPILES:
SEED AND MULCH AS WELL AS EROSION CONTROL BLANKETS WILL BE UTILIZED AS NECESSARY
3. DESCRIBE METHODS TO BE USED FOR STORM DRAIN INLET PROTECTION:
SEE INLET PROTECTION DETAILS
4. DESCRIBE METHODS TO MINIMIZE VEHICLE TRACKING AT CONSTRUCTION EXITS AND STREET SWEEPING ACTIVITIES:
THE PROJECT WILL UTILIZE A ROCK CONSTRUCTION ENTRANCE.
5. DESCRIBE METHODS, IF APPLICABLE, ADDITIONAL SEDIMENT CONTROLS (E.G., DIVERSION BERMS) TO BE INSTALLED TO KEEP RUNOFF AWAY FROM PLANNED INFILTRATION AREAS WHEN EXCAVATED PRIOR TO FINAL STABILIZATION OF THE CONTRIBUTING DRAINAGE AREA:
SILT FENCE TO BE INSTALLED IMMEDIATELY AFTER GRADING TO PROTECT INFILTRATION AREAS.
6. DESCRIBE METHODS TO BE USED TO MINIMIZE SOIL COMPACTION AND PRESERVE TOP SOIL (UNLESS INFEASIBLE) AT THIS SITE:
LIGHT TRACKED EQUIPMENT WILL BE USED, TOPSOIL WILL BE STRIPPED AND STOCKPILED
7. DESCRIBE PLANS TO PRESERVE A 50-FOOT NATURAL BUFFER BETWEEN THE PROJECT'S SOIL DISTURBANCE AND A SURFACE WATER OR PLANS FOR REDUNDANT SEDIMENT CONTROLS IF A BUFFER IS INFEASIBLE:
DOUBLE ROW OF SILT FENCE WILL BE INSTALLED ALONG WETLAND. PROJECT WILL NOT DISTURB WITHIN 200 FEET OF WETLAND.
8. DESCRIBE PLANS FOR USE OF SEDIMENTATION TREATMENT CHEMICALS (E.G., POLYMERS, FLOCCULANTS, ETC.) SEE PART 9.18 OF THE PERMIT:
N/A
9. IS THE PROJECT REQUIRED TO INSTALL A TEMPORARY SEDIMENT BASIN DUE TO 10 OR MORE ACRES DRAINING TO A COMMON LOCATION OR 5 ACRES OR MORE IF THE SITE IS WITHIN 1 MILE OF A SPECIAL OR IMPAIRED WATER?
NO
IF YES, DESCRIBE (OR ATTACH PLANS) SHOWING HOW THE BASIN WILL BE DESIGNED AND CONSTRUCTED IN ACCORDANCE WITH SECTION 14.
N/A

DEWATERING AND BASIN DRAINING (SECTION 10.1)
1. WILL THE PROJECT INCLUDE DEWATERING OR BASIN DRAINING?
NO
IF YES, DESCRIBE MEASURES TO BE USED TO TREAT/DISPOSE OF TURBID OR SEDIMENT-LADEN WATER AND METHOD TO PREVENT EROSION OR SCOUR OF DISCHARGE POINTS (SEE 10.2 THROUGH 10.5 OF THE PERMIT):
N/A
2. WILL THE PROJECT INCLUDE USE OF FILTERS FOR BACKWASH WATER?
NO
IF YES, DESCRIBE HOW FILTER BACKWASH WATER WILL BE MANAGED ON THE SITE OR PROPERLY DISPOSED (10.6):
N/A

ADDITIONAL BMP'S FOR SPECIAL WATERS AND DISCHARGES TO WETLANDS (SECTION 23.1)
1. SPECIAL WATERS. DOES YOUR PROJECT DISCHARGE TO SPECIAL WATERS?
NO
2. IF PROXIMITY TO BEDROCK OR ROAD PROJECTS WHERE THE LACK OF RIGHT OF WAY PRECLUDES THE INSTALLATION OF ANY OF THE PERMANENT STORMWATER MANAGEMENT PRACTICES, THEN OTHER TREATMENT SUCH AS GRASSED SWALES, SMALLER PONDS, OR GRIT CHAMBERS IS REQUIRED PRIOR TO DISCHARGE TO SURFACE WATERS. DESCRIBE WHAT OTHER TREATMENT WILL BE PROVIDED.
N/A
3. DESCRIBE EROSION AND SEDIMENT CONTROLS FOR EXPOSED SOIL AREAS WITH A CONTINUOUS POSITIVE SLOPE TO A SPECIAL WATERS, AND TEMPORARY SEDIMENT BASINS FOR AREAS THAT DRAIN FIVE OR MORE ACRES DISTURBED AT ONE TIME.
N/A
4. DESCRIBE THE UNDISTURBED BUFFER ZONE TO BE USED (NOT LESS THAN 100 LINEAR FEET FROM THE SPECIAL WATER).
N/A
5. DESCRIBE HOW THE PERMANENT STORMWATER MANAGEMENT SYSTEM WILL ENSURE THAT THE PRE AND POST PROJECT RUNOFF RATE AND VOLUME FROM THE 1, AND 2-YEAR 24-HOUR PRECIPITATION EVENTS REMAINS THE SAME.
N/A
6. DESCRIBE HOW THE PERMANENT STORMWATER MANAGEMENT SYSTEM WILL MINIMIZE ANY INCREASE IN THE TEMPERATURE OF TROUT STREAM RECEIVING WATERS RESULTING IN THE 1, AND 2-YEAR 24-HOUR PRECIPITATION EVENTS.
N/A
7. **WETLANDS.** DOES YOUR PROJECT DISCHARGE STORMWATER WITH THE POTENTIAL FOR SIGNIFICANT ADVERSE IMPACTS TO A WETLAND (E.G., CONVERSION OF A NATURAL WETLAND TO A STORMWATER POND)?
NO
IF YES, DESCRIBE THE WETLAND MITIGATION SEQUENCE THAT WILL BE FOLLOWED IN ACCORDANCE WITH SECTION 22 OF THE PERMIT.
N/A

INSPECTIONS AND MAINTENANCE (SECTION 11.1)
DESCRIBE PROCEDURES TO ROUTINELY INSPECT THE CONSTRUCTION SITE:
- ONCE EVERY SEVEN (7) DAYS DURING ACTIVE CONSTRUCTION AND
- WITHIN 24 HOURS AFTER A RAINFALL EVENT GREATER THAN 0.5 INCHES IN 24 HOURS, AND WITHIN (7) DAYS AFTER THAT

INSPECTIONS MUST INCLUDE STABILIZED AREAS, EROSION PREVENTION,AND SEDIMENT CONTROL BMP'S AND INFILTRATION AREAS.
INSPECTOR WILL FOLLOW REQUIREMENTS SPECIFIED ABOVE AND FILL OUT "ATTACHMENT B - CONSTRUCTION STORMWATER INSPECTION CHECKLIST"
1. DESCRIBE PRACTICES FOR STORAGE OF BUILDING PRODUCTS WITH A POTENTIAL TO LEACH POLLUTANTS TO MINIMIZE EXPOSURE TO STORMWATER:
ALL BUILDING PRODUCTS WILL BE SEALED AND STORED IN A MANNER TO MINIMIZE EXPOSURE
2. DESCRIBE PRACTICES FOR STORAGE OF PESTICIDES, HERBICIDES, INSECTICIDES, FERTILIZERS, TREATMENT CHEMICAL, AND LANDSCAPE MATERIALS:
ALL LANDSCAPE TREATMENT CHEMICALS WILL BE SEALED AND STORED IN A MANNER TO MINIMIZED EXPOSURE
3. DESCRIBE PRACTICES FOR STORAGE AND DISPOSAL OF HAZARDOUS MATERIALS OR TOXIC WASTE (E.G., OIL, FUEL, HYDRAULIC FLUIDS, PAINT SOLVENTS, PETROLEUM-BASED PRODUCTS, WOOD PRESERVATIVE, ADDITIVES, CURING COMPOUNDS, AND ACIDS) ACCORDING TO MINN. R. CH. 7045, INCLUDING RESTRICTED ACCESS AND SECONDARY CONTAINMENT:
ALL HAZARDOUS WASTE WILL BE APPROPRIATELY DISPOSED OF OFF SITE ACCORDING TO LOCAL AND STATE LAWS.
4. DESCRIBE COLLECTION, STORAGE AND DISPOSAL OF SOLID WASTE IN COMPLIANCE WITH MINN. R. CH. 7035:
ALL CONSTRUCTION DEBRIS AND SOLID WASTER WILL BE APPROPRIATELY DISPOSED OF OFF SITE ACCORDING TO LOCAL AND STATE LAWS
5. DESCRIBE MANAGEMENT OF PORTABLE TOILETS TO PREVENT TIPPING AND DISPOSAL OF SANITARY WASTES IN ACCORDANCE WITH MINN. R. CH. 7040:
SANITARY AND SEPTIC SERVICES WILL BE PROVIDED TO WORKERS WITH PORTABLE FACILITIES MAINTAINED AS NEEDED BY THE PROVIDER.
6. DESCRIBE SPILL PREVENTION AND RESPONSE FOR FUELING AND EQUIPMENT OR VEHICLE MAINTENANCE:
EMPLOYEES WILL BE TRAINED IN TECHNIQUES DESIGNED TO MINIMIZE SPILLS. VEHICLES AND EQUIPMENT SHALL BE CHECKED FOR LEAKS.
7. DESCRIBE CONTAINMENT AND DISPOSAL OF VEHICLE AND EQUIPMENT WASH WATER AND PROHIBITING ENGINE DEGREASING ON THE SITE:
ALL CONSTRUCTION VEHICLES SHALL BE WASHED OFF SITE
8. DESCRIBE STORAGE AND DISPOSAL OF CONCRETE AND OTHER WASHOUT WASTES SO THAT WASTES DO NOT CONTACT THE GROUND:
ALL CONCRETE WASHOUT SHALL OCCUR OFF SITE.

FINAL STABILIZATION (25.22)
1. DESCRIBE METHOD OF FINAL STABILIZATION (PERMANENT COVER) OF ALL DISTURBED AREAS:
FINAL STABILIZATION WILL BE ACCOMPLISHED WITH PAVEMENT, SOD AND LANDSCAPE MATERIALS.
2. DESCRIBE METHODS USED TO CLEAN ALL STORMWATER TREATMENT SYSTEMS AND STORMWATER CONVEYANCE SYSTEMS OF ACCUMULATED SEDIMENT (25.22):
CLEANING OF STORMWATER TREATMENT SYSTEMS SHALL BE DONE BY HAND SUCH AS THE USE OF A SHOVEL.
3. DESCRIBE METHODS FOR REMOVING ALL TEMPORARY SYNTHETIC EROSION PREVENTION AND SEDIMENT CONTROL BMP'S:
REMOVAL OF TEMPORARY SYNTHETIC EROSION PREVENTION AND SEDIMENT CONTROL BMP'S CAN BE DONE BY HAND AND PROPERLY DISPOSED OF.

CivilSite GROUP
Civil Engineering * Surveying * Landscape Architecture
5000 Glenwood Avenue
Golden Valley, MN 55422
civilsitegroup.com 612-615-0060

PRELIMINARY: NOT FOR CONSTRUCTION

PROJECT
FAIRWAY COMMONS APARTMENTS
1644 LARPENTEUR AVE W, FALCON HEIGHTS, MN 55113

OWNER
VELAIR DEVELOPMENT COMPANY
7645 LYNDALE AVE SOUTH #300, MINNEAPOLIS, MN. 55423

I HEREBY CERTIFY THAT THIS PLAN, SPECIFICATION, OR REPORT WAS PREPARED BY ME OR UNDER MY DIRECT SUPERVISION AND THAT I AM A DULY LICENSED PROFESSIONAL ENGINEER UNDER THE LAWS OF THE STATE OF MINNESOTA.

David J. Knaeble
DATE 03/02/2026 LICENSE NO. 48776

ISSUE/SUBMITTAL SUMMARY

DATE	DESCRIPTION
03/02/2026	CITY SUBMITTAL

PROJECT MANAGER	DAVID KNAEBLE
CONTACT NUMBER	612-615-0060
DRAWN BY	BN
REVIEWED BY	DK
PROJECT NUMBER	25003

REVISION SUMMARY

DATE	DESCRIPTION

SWPPP - ATTACHMENTS

SW1.4

© COPYRIGHT 2026 CIVIL SITE GROUP INC.

ATTACHMENT B: SWPPP INSPECTION FORM

NOTE: THIS INSPECTION REPORT DOES NOT ADDRESS ALL ASPECTS OF THE NATIONAL POLLUTANT DISCHARGE ELIMINATION SYSTEM/STATE DISPOSAL SYSTEM (NPDES/SDS) CONSTRUCTION STORMWATER PERMIT (PERMIT) ISSUED ON AUGUST 1, 2018. THE COMPLETION OF THIS CHECKLIST DOES NOT GUARANTEE THAT ALL PERMIT REQUIREMENTS ARE IN COMPLIANCE; IT IS THE RESPONSIBILITY OF THE PERMITTEE(S) TO READ AND UNDERSTAND THE PERMIT REQUIREMENTS.

FACILITY INFORMATION
SITE NAME:
SITE ADDRESS: PERMIT NUMBER:
CITY: STATE: ZIP CODE:

INSPECTION INFORMATION
INSPECTOR NAME: _____ PHONE NUMBER: _____
ORGANIZATION/COMPANY MAN: _____
DATE (MM/DD/YYYY): _____ TIME: _____ AM / PM

	Y	N
IS THE INSPECTOR CERTIFIED IN SEDIMENT AND EROSION CONTROL AND IS IT DOCUMENTED IN THE STORMWATER POLLUTION PREVENTION PLAN (SWPPP)?	☐	☐

IS THIS INSPECTION ROUTINE OR IN RESPONSE TO A STORM EVENT:

7 DAY	RAIN
☐	☐

RAINFALL AMOUNT (IF APPLICABLE): _____

	Y	N
IS SITE WITHIN ONE AERIAL MILE OF SPECIAL OR IMPAIRED WATER THAT CAN POTENTIALLY RECEIVE DISCHARGE FROM THE SITE?	☐	☐

IF YES, FOLLOW SECTION 23 AND OTHER APPLICABLE PERMIT REQUIREMENTS

NOTE: IF N/A IS SELECTED AT ANY TIME, SPECIFY WHY IN THE COMMENT AREA FOR THAT SECTION.

EROSION CONTROL REQUIREMENT (SECTION 8.1)

	Y	N	N/A
1. ARE SOILS STABILIZED WHERE NO CONSTRUCTION ACTIVITY HAS OCCURRED FOR 14 DAYS (INCLUDING STOCKPILES)? (7 DAYS WHERE APPLICABLE, OR 24 HOURS DURING MINNESOTA DEPARTMENT OF NATURAL RESOURCES [DNR] FISH SPAWNING RESTRICTIONS)	☐	☐	☐
2. HAS THE NEED TO DISTURB STEEP SLOPES BEEN MINIMIZED?	☐	☐	☐
3. IF STEEP SLOPES ARE DISTURBED, ARE STABILIZATION PRACTICES DESIGNED FOR STEEP SLOPES USED?	☐	☐	☐
4. ALL DITCHES/SWALES STABILIZED 200' BACK FROM POINT OF DISCHARGE OR PROPERTY EDGE WITHIN 24 HOURS? (MULCH, HYDROMULCH, TACKIFIER, OR SIMILAR BEST MANAGEMENT PRACTICES [BMPS] ARE NOT ACCEPTABLE IN DITCHES/SWALES IF THE SLOPE IS GREATER THAN 2%)ARE APPROPRIATE BMP'S INSTALLED PROTECTING INLETS/OUTLETS?	☐	☐	☐
5. DO PIPE OUTLETS HAVE ENERGY DISSIPATION (WITHIN 24 HOURS OF CONNECTION)?	☐	☐	☐
6. IS CONSTRUCTION PHASING BEING FOLLOWED IN ACCORDANCE WITH THE SWPPP?	☐	☐	☐
7. ARE AREAS NOT TO BE DISTURBED MARKED OFF (FLAGS, SIGNS, ETC.)?	☐	☐	☐

COMMENTS:

SEDIMENT CONTROL REQUIREMENTS (SECTION 9.1)

	Y	N	N/A
1. ARE PERIMETER SEDIMENT CONTROLS INSTALLED PROPERLY ON ALL DOWN GRADIENT PERIMETERS?	☐	☐	☐
2. ARE APPROPRIATE BMPS INSTALLED PROTECTING INLETS, CATCH BASINS, AND CULVERT INLETS?	☐	☐	☐
3. IS A 50 FOOT NATURAL BUFFER PRESERVED AROUND ALL SURFACE WATERS DURING CONSTRUCTION?	☐	☐	☐
3.1. IF NO, HAVE REDUNDANT SEDIMENT CONTROLS BEEN INSTALLED?	☐	☐	☐
4. DO ALL ERODIBLE STOCKPILES HAVE PERIMETER CONTROL IN PLACE?	☐	☐	☐
5. IS THERE A TEMPORARY SEDIMENT BASIN ON SITE, AND IS IT BUILT AS REQUIRED IN SECTION 14 OF THE PERMIT?	☐	☐	☐
6. IS SOIL COMPACTION BEING MINIMIZED WHERE NOT DESIGNED FOR COMPACTION?	☐	☐	☐
7. IS TOPSOIL BEING PRESERVED UNLESS INFEASIBLE?	☐	☐	☐
8. IF CHEMICAL FLOCCULANTS ARE USED, IS THERE A CHEMICAL FLOCCULANT PLAN IN PLACE?	☐	☐	☐

COMMENTS:

MAINTENANCE AND INSPECTIONS (SECTION 11)

	Y	N	N/A
1. ARE ALL PREVIOUSLY STABILIZED AREAS MAINTAINING GROUND COVER?	☐	☐	☐
2. ARE PERIMETER CONTROLS MAINTAINED AND FUNCTIONING PROPERLY, SEDIMENT REMOVED WHEN ONE-HALF FULL?	☐	☐	☐
3. ARE INLET PROTECTION DEVICES MAINTAINED AND ADEQUATELY PROTECTING INLETS?	☐	☐	☐
4. ARE THE TEMPORARY SEDIMENT BASINS BEING MAINTAINED AND FUNCTIONING PROPERLY?	☐	☐	☐
5. ARE VEHICLE TRACKING BMPS AT SITE EXISTS IN PLACE AND MAINTAINED AND FUNCTIONING PROPERLY?	☐	☐	☐
6. IS ALL TRACKED SEDIMENT BEING REMOVED WITHIN 24 HOURS?	☐	☐	☐
7. HAVE ALL SURFACE WATERS, DITCHES, CONVEYANCES, AND DISCHARGE POINTS BEEN INSPECTED?	☐	☐	☐
8. WERE ANY DISCHARGES SEEN DURING THIS INSPECTION (I.E., SEDIMENT, TURBID WATER, OR OTHERWISE)?	☐	☐	☐

IF YES, RECORD THE LOCATION OF ALL POINTS OF DISCHARGE. PHOTOGRAPH AND DESCRIBE THE DISCHARGE (SIZE, COLOR, ODOR, FOAM, OIL SHEEN, TIME, ETC.). DESCRIBE HOW THE DISCHARGE WILL BE ADDRESSED. WAS THE DISCHARGE A SEDIMENT DELTA? IF YES, WILL THE DELTA BE RECOVERED WITHIN SEVEN DAYS AND IN ACCORDANCE WITH ITEM 11.5 OF THE PERMIT?

COMMENTS:

POLLUTION PREVENTION (SECTION 12)

	Y	N	N/A
1. ARE ALL CONSTRUCTION MATERIALS THAT CAN LEACH POLLUTANTS UNDER COVER OR PROTECTED?	☐	☐	☐
2. ARE HAZARDOUS MATERIALS BEING PROPERLY STORED?	☐	☐	☐
3. ARE APPROPRIATE BMPS BEING USED TO PREVENT DISCHARGES ASSOCIATED WITH FUELING AND MAINTENANCE OF EQUIPMENT OR VEHICLES?	☐	☐	☐
4. ARE ALL SOLID WASTES BEING PROPERLY CONTAINED AND DISPOSED OF?	☐	☐	☐
5. IS THERE A CONCRETE/OTHER MATERIAL WASHOUT AREA ON SITE AND IS IT BEING USED?	☐	☐	☐
6. IS THE CONCRETE WASHOUT AREA MARKED WITH A SIGN?	☐	☐	☐
7. ARE THE CONCRETE/OTHER MATERIAL WASHOUT AREAS PROPERLY MAINTAINED?	☐	☐	☐

COMMENTS:

OTHER

	Y	N	N/A
1. IS A COPY OF THE SWPPP, INSPECTION RECORDS, AND TRAINING DOCUMENTATION LOCATED ON THE CONSTRUCTION SITE, OR CAN IT BE MADE AVAILABLE WITHIN 72 HOURS?	☐	☐	☐
2. HAS THE SWPPP BEEN FOLLOWED AND IMPLEMENTED ON SITE, AND AMENDED AS NEEDED?	☐	☐	☐
3. IS ANY DEWATERING OCCURRING ON SITE?	☐	☐	☐
IF YES, WHAT BMPS ARE BEING USED TO ENSURE THAT CLEAN WATER IS LEAVING THE SITE AND THE DISCHARGE IS NOT CAUSING EROSION OR SCOUR?	☐	☐	☐
4. WILL A PERMANENT STORMWATER MANAGEMENT SYSTEM BE CREATED FOR THIS PROJECT IF REQUIRED AND IN ACCORDANCE WITH SECTION 15 OF THE PERMIT (IF ADDING AN ACRE OR MORE OF NEW IMPERVIOUS SURFACE)? IF YES, DESCRIBE:	☐	☐	☐
5. IF INFILTRATION/FILTRATION SYSTEMS ARE BEING CONSTRUCTED, ARE THEY MARKED AND PROTECTED FROM COMPACTION AND SEDIMENTATION?	☐	☐	☐

6. DESCRIPTION OF AREAS OF NON-COMPLIANCE NOTED DURING THE INSPECTION, REQUIRED CORRECTIVE ACTIONS, AND RECOMMENDED DATE OF COMPLETION OF CORRECTIVE ACTIONS:

7. PROPOSED AMENDMENTS TO THE SWPPP:

8. POTENTIAL AREAS OF FUTURE CONCERN:

9. ADDITIONAL COMMENTS

DISCLOSURES:

- AFTER DISCOVERY, THE PERMIT REQUIRES MANY OF THE DEFICIENCIES THAT MAY BE FOUND ON SITE BE CORRECTED WITHIN A SPECIFIED PERIOD OF TIME. SEE PERMIT FOR MORE DETAILS.
- THE PERMITTEE(S) IS/ARE RESPONSIBLE FOR THE INSPECTION AND MAINTENANCE OF TEMPORARY AND PERMANENT WATER QUALITY MANAGEMENT BMPS AS WELL AS EROSION PREVENTION AND SEDIMENT CONTROL BMPS UNTIL ANOTHER PERMITTEE HAS OBTAINED COVERAGE UNDER THIS PERMIT ACCORDING TO SECTION 3, OR THE PROJECT HAS MET THE TERMINATION CONDITIONS OF THE PERMIT AND A NOTICE OF TERMINATION HAS BEEN SUBMITTED TO THE MINNESOTA POLLUTION CONTROL AGENCY.

ATTACHMENT C: MAINTENANCE PLAN FOR PERMANENT STORM WATER TREATMENT SYSTEM

ATTACHMENT C - ABOVE-GROUND
FACILITY MANAGEMENT SCHEDULE

1. ALL STORMWATER RETENTION, DETENTION AND TREATMENT BASINS MUST BE INSPECTED AT LEAST ONCE A YEAR TO DETERMINE THAT BASIN RETENTION AND TREATMENT CHARACTERISTICS ARE ADEQUATE. A STORAGE TREATMENT BASIN WILL BE CONSIDERED INADEQUATE IF SEDIMENT HAS DECREASED THE WET STORAGE VOLUME BY 50 PERCENT OR DRY STORAGE VOLUME BY 25 PERCENT OF ITS ORIGINAL DESIGN VOLUME. BASED ON THIS INSPECTION, IF A STORMWATER BASIN REQUIRES SEDIMENT CLEANOUT, THE BASIN WILL BE RESTORED TO ITS ORIGINAL DESIGN CONTOURS AND VEGETATED STATE WITHIN ONE YEAR OF THE INSPECTION DATE.
2. ALL OUTLET STRUCTURES, CULVERTS, OUTFALL STRUCTURES AND OTHER STORMWATER FACILITIES FOR WHICH MAINTENANCE REQUIREMENTS ARE NOT OTHERWISE SPECIFIED HEREIN MUST BE INSPECTED IN THE SPRING, SUMMER AND FALL OF EACH YEAR. WITHIN 30 DAYS OF THE INSPECTION DATE, ALL ACCUMULATED SEDIMENT AND DEBRIS MUST BE REMOVED SUCH THAT EACH STORMWATER FACILITY OPERATES AS DESIGNED AND PERMITTED. CONTRIBUTING DRAINAGE AREAS MUST BE KEPT CLEAR OF LITTER AND VEGETATIVE DEBRIS, INFLOW PIPES AND OVERFLOW SPILLWAYS KEPT CLEAR, INLET AREAS KEPT CLEAN, AND UNDESIRABLE VEGETATION REMOVED. EROSION IMPAIRING THE FUNCTION OR INTEGRITY OF THE FACILITIES, IF ANY, WILL BE CORRECTED, AND ANY STRUCTURAL DAMAGE IMPAIRING OR THREATENING TO IMPAIR THE FUNCTION OF THE FACILITIES MUST BE REPAIRED.
3. VOLUME CONTROL FACILITIES AND CONTRIBUTING DRAINAGE AREAS MUST BE INSPECTED EVERY THREE MONTHS DURING THE OPERATIONAL PERIOD (BETWEEN SPRING SNOWMELT AND FIRST SUBSTANTIAL SNOWFALL) AND MONITORED AFTER RAINFALL EVENTS OF 1 INCH OR MORE TO ENSURE THAT THE CONTRIBUTING DRAINAGE AREA IS CLEAR OF LITTER AND DEBRIS, INFLOW PIPES AND OVERFLOW SPILLWAYS ARE CLEAR, INLET AREAS ARE CLEAN, UNDESIRABLE VEGETATION IS REMOVED AND THERE IS NO EROSION IMPAIRING OR THREATENING TO IMPAIR THE FUNCTION OF A FACILITY. IF SEDIMENT HAS ACCUMULATED IN A INFILTRATION FEATURE, WITHIN 30 DAYS OF INSPECTION DEPOSITED SEDIMENTS MUST BE REMOVED, THE INFILTRATION CAPACITY OF THE UNDERLYING SOILS MUST BE RESTORED, AND ANY SURFACE DISTURBANCE MUST BE STABILIZED. INSPECTION MUST ENSURE THAT SEDIMENT TRAPS AND FOREBAYS ARE TRAPPING SEDIMENT AND THAT MORE THAN 50 PERCENT OF THE STORAGE VOLUME REMAINS, THE CONTRIBUTING DRAINAGE AREA IS STABLE (I.E., NO EROSION IS OBSERVED), AND INLETS AND OUTLET/OVERFLOW SPILLWAYS ARE IN GOOD CONDITIONS WITH NO EROSION. MAINTENANCE TECHNIQUES USED MUST PROTECT THE INFILTRATION CAPACITY OF THE PRACTICE BY LIMITING SOIL COMPACTION TO THE GREATEST EXTENT POSSIBLE (E.G., BY USING LOW-IMPACT EARTH-MOVING EQUIPMENT).

CivilSite GROUP
Civil Engineering ˚ Surveying ˚ Landscape Architecture
5000 Glenwood Avenue
Golden Valley, MN 55422
civilsitegroup.com 612-615-0060

PRELIMINARY: NOT FOR CONSTRUCTION

PROJECT
FAIRWAY COMMONS APARTMENTS
1644 LARPENTEUR AVE W, FALCON HEIGHTS, MN 55113

OWNER
VELAIR DEVELOPMENT COMPANY
7645 LYNDALE AVE SOUTH #300, MINNEAPOLIS, MN, 55423

I HEREBY CERTIFY THAT THIS PLAN, SPECIFICATION, OR REPORT WAS PREPARED BY ME OR UNDER MY DIRECT SUPERVISION AND THAT I AM A DULY LICENSED PROFESSIONAL ENGINEER UNDER THE LAWS OF THE STATE OF MINNESOTA.

David J. Knaeble
David J. Knaeble
DATE 03/02/2026 LICENSE NO. 48776

ISSUE/SUBMITTAL SUMMARY

DATE	DESCRIPTION
03/02/2026	CITY SUBMITTAL

PROJECT MANAGER	DAVID KNAEBLE
CONTACT NUMBER	612-615-0060
DRAWN BY	BN
REVIEWED BY	DK
PROJECT NUMBER	25503

REVISION SUMMARY

DATE	DESCRIPTION

SWPPP - ATTACHMENTS

SW1.5

© COPYRIGHT 2026 CIVIL SITE GROUP INC.

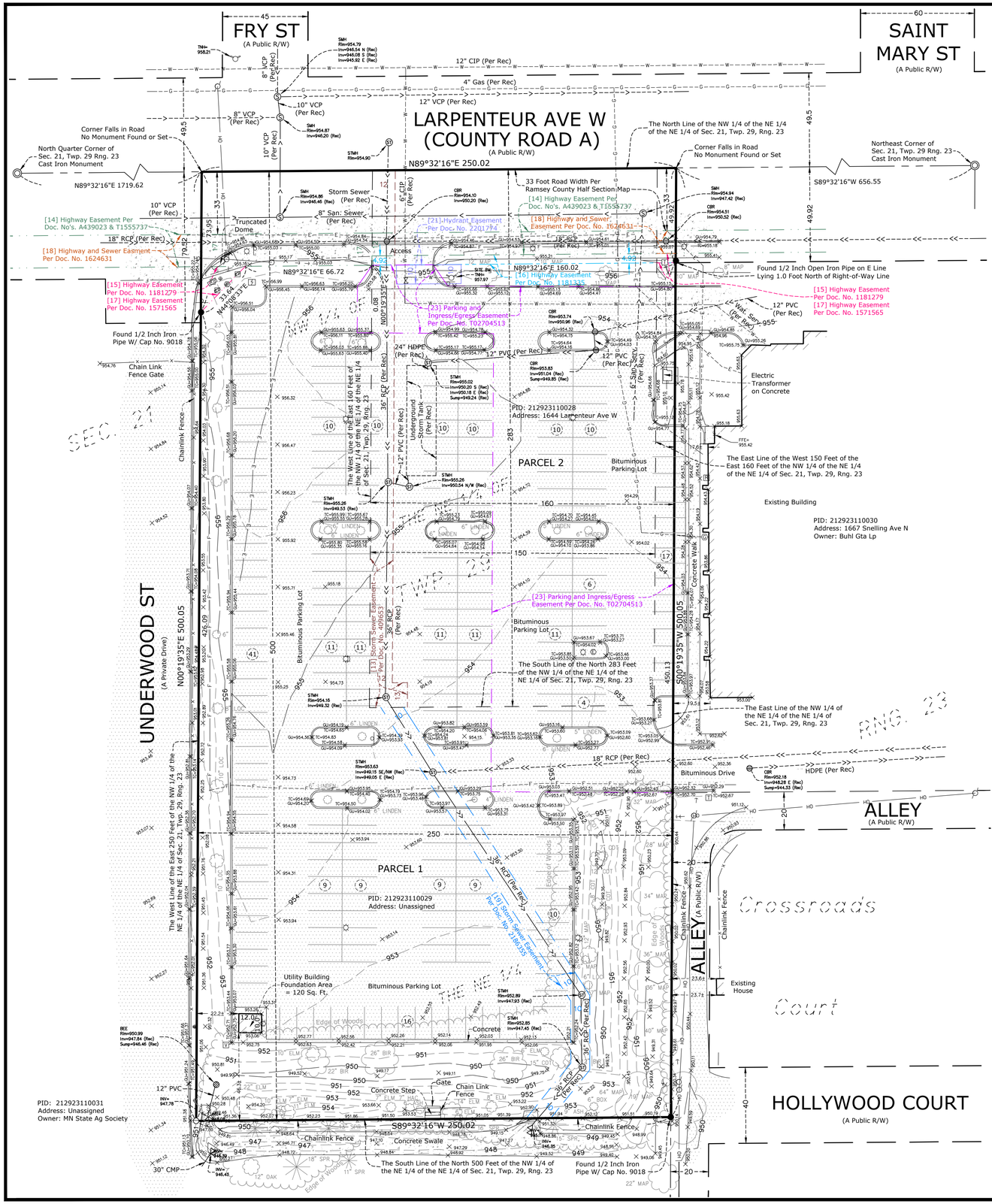

DESCRIPTION OF PROPERTY SURVEYED

Parcel 1:

The East 250 feet of the North 500 feet except the West 150 feet of the East 160 feet of the North 283 feet of the Northwest Quarter of the Northeast Quarter of the Northeast Quarter of Section 21, Township 29, Range 23.

Parcel 2:

The West 150 feet of the East 160 feet of the North 283 feet of the Northwest Quarter of the Northeast Quarter of the Northeast Quarter of Section 21, Township 29, Range 23, West of the Fourth Principal Meridian.

(All Torrens Property, Certificate of Title No. 640336)

GENERAL SURVEY NOTES

1. Bearings are based on the Ramsey County Coordinate System (1986 Adjustment).
2. Elevations are based on the NGVD 29 Datum. Site Benchmark is the top nut of the fire hydrant located on the south side of Larpenteur Ave W east of the driveway access to the subject property, as shown hereon. Elevation = 958.02.
3. We have shown the location of utilities to the best of our ability based on observed evidence together with evidence from the following sources: plans obtained from utility companies, plans provided by client, markings by utility companies and other appropriate sources. We have used this information to develop a view of the underground utilities for this site. However, lacking excavation, the exact location of underground features cannot be accurately, completely and reliably depicted. Where additional or more detailed information is required, the client is advised that excavation may be necessary. Also, please note that seasonal conditions may inhibit our ability to visibly observe all the utilities located on the subject property.

ALTA/NSPS LAND TITLE SURVEY NOTES

(numbered per Table A)

1. Monuments placed and/or found at all major corners of the boundary of the surveyed property as shown hereon.
2. Site Address: 1644 Larpenteur Ave W, Falcon Heights, Minnesota 55113.
3. This property is contained in Zone X (area determined to be outside the 0.2% annual chance floodplain) per Flood Insurance Rate Map, Community Panel No. 27123C0085G, effective date of June 4, 2010. Please note, referenced flood map is not printer per the FEMA web site.
4. The gross land area is 125,012 +/- square feet or 2.870 +/- acres.
7. (a) Exterior dimensions of buildings at ground level as shown hereon.
   (b)(1) Square footage of exterior footprint of buildings at ground level as shown hereon.
8. Substantial features observed in the process of conducting the fieldwork as shown hereon. Please note that seasonal conditions may inhibit our ability to visibly observe all site features located on the subject property.
9. The number of striped parking stalls on this site are as follows: 224 Regular + 0 Handicap = 224 Total Parking Stalls.
   Please note due to the existing condition of the parking stripes, some parking stripes have been drawn utilizing aerial imagery.
13. The names of the adjoining owners of the platted lands, as shown hereon, are based on information obtained from the Ramsey County Interactive Property Map.
15. Some site feature locations obtained per aerial mapping, as shown and labeled hereon.

SURVEY REPORT

1. This map and report was prepared with the benefit of a Commitment for Title Insurance issued by First American Title Insurance Company, File No. NCS-1259818-MPLS Revision Number 1, dated December 29, 2025.
   We note the following with regards to Schedule B II Exceptions of the herein referenced Title Commitment:
   a. Item no.'s 1-12, 20, 22, 24 and 25 are not survey related.
   b. The following are numbered per the referenced Title Commitment:
      [13]. Easement for storm sewer purposes and incidental rights in favor of the County of Ramsey as contained in Easement dated July 23, 1959, recorded October 16, 1959, as Document No. 409653. (As to Parcel 2)
      Document creates a storm sewer and access easement in favor of the County of Ramsey over a westerly portion of Parcel 2, as shown hereon.
      [14]. Easement for highway purposes in favor of the County of Ramsey as contained in Final Certificate dated June 14, 1961, recorded January 26, 1962 in the office of the County Recorder in Book 1775, Page 591 as Document No. 1555737 and in the office of the Registrar of Titles as Document No. 439023. (As to Parcels 1 and 2)
      Document creates a highway easement in favor of the County of Ramsey over a northerly portion of the subject property, as shown hereon.
      [15]. Easement for highway purposes and incidental rights in favor of the County of Ramsey as contained in Highway Easement dated January 12, 1998, recorded March 23, 1998, as Document No. 1181279. (As to Parcel 1)
      Document creates a perpetual highway easement in favor of the County of Ramsey over a northwesterly portion of Parcel 1, as shown hereon.
      [16]. Easement for highway purposes and incidental rights in favor of the County of Ramsey as contained in Highway Easement dated January 12,1998, recorded March 23, 1998, as Document No. 1181335. (As to Parcel 2)
      Document creates a perpetual highway easement in favor of the County of Ramsey over a northerly portion of Parcel 2, as shown hereon.
      [17]. Easement for highway purposes and incidental rights in favor of the County of Ramsey as contained in Highway Easement dated August 25, 1999, recorded August 25, 1999, as Document No. 1571565. (As to Parcel 1)
      Document creates a perpetual highway easement in favor of the County of Ramsey over a northwesterly portion of Parcel 1, as shown hereon.
      [18]. Easements for highway and sewer purposes, together with any incidental rights, in favor of the County of Ramsey as contained in Highway Easement and Easement dated June 8, 1959, recorded January 26, 2001, as Document No. 1624631. (As to Parcel 1)
      Document creates an easement for highway and sewer pruposes in favor of the County of Ramsey over a northerly portion of Parcel 1, as shown hereon.
      [19]. Terms, conditions and easement for storm sewer purposes in favor of the City of Falcon Heights, a Minnesota municipal corporation, as contained in Storm Sewer Easement Agreement dated September 12, 2012, recorded September 25, 2012, as Document No. 2186355. (As to Parcel 1)
      Document creates a storm sewer easement in favor of the City of Falcon Heights over a southerly portion of Parcel 1, as shown hereon.
      [21]. Terms, conditions and easement for fire hydrant purposes in favor of the Board of Water Commissioners of the City of St. Paul, a Minnesota municipal corporation, as contained in Fire Hydrant Easement Agreement dated October 19, 2012, recorded February 19, 2013, as Document No. 2201774. (As to Parcel 2)
      Document creates a fire hydrant and access easement in favor of the Board of Water Commissioners of the City of Saint Paul over a northerly portion of Parcel 2, as shown hereon.
      [23]. Terms, provisions and easements is contained in Easement Agreement dated July 01, 2021, recorded June 30, 2021, as Document No. T02704513. (As to Parcels 1 and 2)
      Document creates an easement for parking and vehicular & pedestrian ingress/egress in favor of the adjoining property to the east, over an easterly portion of the subject property, as shown hereon.
2. Conflicts such as (but not limited to): encroachments, protrusions, access, occupation, and easements and/or servitudes:
   [A]. We have shown Larpenteur Ave W (County Road A) over the Northerly 33 feet of the subject property per the Ramsey County half section map. We were not provided any documents for fee taking or easement over said portion of the subject property.

ALTA CERTIFICATION

To: Buhl Larpenteur West, LLC, a Minnesota limited liability company; MWF Properties, LLC, a Minnesota limited liability company; and First American Title Insurance Company:

This is to certify that this map or plat and the survey on which it is based were made in accordance with the 2021 Minimum Standard Detail Requirements for ALTA/NSPS Land Title Surveys, jointly established and adopted by ALTA and NSPS, and includes Items 1, 2, 3, 4, 7(a), 7(b)(1), 8, 9, 13, and 15 of Table A thereof.

The fieldwork was completed on 02-03-2026.

Dated this 4th day of February, 2026.

Rory L. Synstelien
rory@civilsitegroup.com

Minnesota License No. 44565

Linetype & Symbol Legend

N

30 15 0 15 30 60

SCALE IN FEET

- ELECTRIC LINE
- ELECTRIC LINE (RECORD)
- FIBER/COMM. LINE
- FIBER/COMM. LINE (RECORD)
- GASMAIN
- GASMAIN (RECORD)
- OVERHEAD UTILITIES
- SANITARY SEWER
- SANITARY SEWER (RECORD)
- STORM SEWER
- STORM SEWER (RECORD)
- TELEPHONE LINE
- TELEPHONE LINE (RECORD)
- WATERMAIN
- WATERMAIN (RECORD)
- CHAINLINK FENCE LINE
- WOODEN FENCE LINE
- IRON FENCE LINE
- GUARDRAIL
- ACCESS RESTRICTION
- CONCRETE SURFACE
- PAVER SURFACE
- BITUMINOUS SURFACE
- GRAVEL/LANDSCAPE SURFACE
- AIR CONDITIONER
- CABLE TV BOX
- ELECTRIC MANHOLE
- ELECTRIC TRANSFORMER
- ELECTRICAL METER
- FIBER/COMM. MANHOLE
- POWER POLE
- GUY WIRE
- GAS METER
- GAS MANHOLE
- GAS VALVE
- ROOF DRAIN
- SEWER CLEAN OUT
- SANITARY MANHOLE
- STORM MANHOLE
- CATCH BASIN
- FLARED END SECTION
- TELEPHONE BOX
- TELEPHONE MANHOLE
- TRAFFIC SIGNAL
- HYDRANT
- FIRE CONNECTION
- POST INDICATOR VALVE
- WATER MANHOLE
- WATER VALVE
- WELL
- SATELLITE DISH
- UTILITY VAULT
- UTILITY MANHOLE
- ELECTRICAL OUTLET
- HAND HOLE
- BOLLARD
- FLAG POLE
- FUEL TANK
- HANDICAP SYMBOL
- LIGHT POLE
- MAIL BOX
- SIGN
- CONIFEROUS TREE
- DECIDUOUS TREE
- BUSH/SHRUB
- SB SOIL BORING
- FOUND IRON MONUMENT
- SET OR TO BE SET IRON MONUMENT
- CAST IRON MONUMENT

CivilSite GROUP
Civil Engineering • Surveying • Landscape Architecture
5000 Glenwood Avenue
Golden Valley, MN 55422
civilsitegroup.com 612-615-0060

PROJECT
1644 Larpenteur Ave W
Falcon Heights, Ramsey County, Minnesota 55113

CLIENT
Velair
7645 Lyndale Ave South, Suite 300, Minneapolis, Minnesota 55423

I HEREBY CERTIFY THAT THIS SURVEY, PLAN, OR REPORT WAS PREPARED BY ME OR UNDER MY DIRECT SUPERVISION AND THAT I AM A DULY LICENSED LAND SURVEYOR UNDER THE LAWS OF THE STATE OF MINNESOTA.

RORY L. SYNSTELIEN
DATE 2-4-2026 LICENSE NO. 44565

QA/QC

FIELD CREW	DP/CK
DRAWN BY	DD
REVIEWED BY	CJ
UPDATED BY	

VICINITY MAP

REVISION SUMMARY

DATE	DESCRIPTION

PROJECT NO.: 25503.00

ALTA/NSPS LAND TITLE SURVEY

V1.0

©COPYRIGHT 2026 CIVIL SITE GROUP INC.

CITY OF FALCON HEIGHTS, MINNESOTA

PUBLIC HEARING NOTICE

NOTICE IS HEREBY GIVEN, that the Planning Commission at its regular meeting at 7:00 p.m. on March 24, 2026, in the City Hall Council Chambers, 2077 W. Larpenteur Ave, will hold a public hearing to consider the application of Velair Development Company for an amendment to a previously approved Planned Unit Development (PUD) for a 110-unit senior (55+) affordable apartment building located at 1644 Larpenteur Ave W, Falcon Heights, MN 55113.

The application and other planning documents will be available upon request no later than March 20, 2026. It will also be available on the City's website at www.falconheights.org. If you have any questions regarding the public hearing, please contact Hannah Myhren, Community Development Coordinator at (651) 792-7613 or hannah.myhren@falconheights.org.

Dated: March 10, 2026

Hannah Myhren, Community Development Coordinator

City of Falcon Heights, Minnesota

CITY of FALCON HEIGHTS
PUBLIC HEARING NOTICE

Notice is hereby given that the Planning Commission at its regular meeting at 7:00 p.m. on March 24, 2026, in the City Hall Council Chambers, 2077 W. Larpenteur Ave, will hold a public hearing to consider the application of Velair Development Company for an amendment to a previously approved Planned Unit Development (PUD) for a 110-unit senior (55+) affordable apartment building located at 1644 Larpenteur Ave W, Falcon Heights, MN 55113.

The application and other planning documents will be available upon request no later than March 20, 2026. It will also be available on the City's website. If you have any questions regarding the public hearing, please contact Hannah Myhren, Community Development Coordinator at (651) 792-7613 or hannah.myhren@falconheights.org.

AFFIDAVIT OF PUBLICATION
STATE OF MINNESOTA
COUNTY OF RAMSEY

I, Kayla Tsuchiya, being duly sworn on oath, says: that she is, and during all times herein state has been, Inside Sales Representative of Northwest Publication, LLC., Publisher of the newspaper known as the Saint Paul Pioneer Press, a newspaper of General circulation within the City of St. Paul and the surrounding Counties of Minnesota and Wisconsin including Ramsey and Kanabec.

That the notice hereto attached was cut from the columns of said newspaper and was printed and published therein on the following date(s):
3/12/2026, 3/13/2026

Newspaper Ref./AD Number#: 41798

Client/Advertiser: CITY OF FALCON HEIGHTS LEGALS

AFFIANT SIGNATURE

Subscribed and sworn to before me this
3/14/2026

True Lee

NOTARY PUBLIC

Ramsey County, MN
My commission expires January 31, 2030

True Lee
State of Minnesota
Notary Public
Commission No. 1171307900035
My Commission Expires 01/31/2030

CITY of FALCON HEIGHTS
PUBLIC HEARING NOTICE

Notice is hereby given that the Planning Commission at its regular meeting at 7:00 p.m. on March 24, 2026, in the City Hall Council Chambers, 2077 W. Larpenteur Ave, will hold a public hearing to consider the application of Velair Development Company for an amendment to a previously approved Planned Unit Development (PUD) for a 110-unit senior (55+) affordable apartment building located at 1644 Larpenteur Ave W, Falcon Heights, MN 55113.

The application and other planning documents will be available upon request no later than March 20, 2026. It will also be available on the City's website. If you have any questions regarding the public hearing, please contact: Hannah Myhren, Community Development Coordinator at (651) 792-7613 or hannah.myhren@falconheights.org.

March 11, 2026

Dear Property Owner or Resident:

You are hereby notified that the City of Falcon Heights has received an application for an amendment to a previously-approved Planned Unit Development (PUD) for a 110-unit senior (55+) affordable apartment building, located at 1644 Larpenteur Ave W, directly west of Amber Union apartments.

The location of this development is PIN 212923110029 and PIN 212923110028, to the west of Amber Union apartments with a driveway along Larpenteur Avenue West. The building will include a mix of studio, one, and two-bedroom floorplans across four stories of residential and one level of underground parking.

The Planning Commission will meet and hold a Public Hearing on this matter on Tuesday, March 24, 2026 at 7:00 PM at Falcon Heights City Hall, 2077 Larpenteur Avenue West, Falcon Heights, MN 55113.

During the meeting on Tuesday, March 24, city staff will present information regarding the PUD amendment. The Planning Commission will also hear public comment and discuss before making a recommendation to City Council.

The application and other planning documents will be available upon request no later than Friday, March 20, 2026. It will be also be available on the City's website. If you have questions or comments before the hearing, you may contact City Hall at 651-792-7600 or myself directly at hannah.myhren@falconheights.org.

Sincerely,

Hannah Myhren

Hannah Myhren
Community Development Coordinator / Planner

REGENTS OF THE UNIV OF MN
100 CHURCH ST
MINNEAPOLIS MN 55455-0110

G-TWO PROPERTIES LLC
11130 60TH ST
STILLWATER MN 55082-9310

MN STATE AG SOCIETY
1265 SNELLING AVE N
ST PAUL MN 55108-3003

Occupant
1582 HOLLYWOOD COURT
FALCON HEIGHTS, MN 55108

Occupant
1583 HOLLYWOOD COURT
FALCON HEIGHTS, MN 55108

Occupant
1589 HOLLYWOOD COURT
FALCON HEIGHTS, MN 55108

Occupant
1590 HOLLYWOOD COURT
FALCON HEIGHTS, MN 55108

Occupant
1597 HOLLYWOOD COURT
FALCON HEIGHTS, MN 55108

Occupant
1598 HOLLYWOOD COURT
FALCON HEIGHTS, MN 55108

Occupant
1601 LARPENTEUR AVENUE WEST
FALCON HEIGHTS, MN 55113

Occupant
1603 HOLLYWOOD COURT
FALCON HEIGHTS, MN 55108

Occupant
1603 LARPENTEUR AVENUE WEST
FALCON HEIGHTS, MN 55113

Occupant
1604 HOLLYWOOD COURT
FALCON HEIGHTS, MN 55108

Occupant
1607 HOLLYWOOD COURT
FALCON HEIGHTS, MN 55108

Occupant
1608 HOLLYWOOD COURT
FALCON HEIGHTS, MN 55108

Occupant
1611 HOLLYWOOD COURT
FALCON HEIGHTS, MN 55108

421 KOEHLER ROAD LP
1611 LARPENTEUR AVE
ROSEVILLE MN 55113-5702

Occupant
1612 HOLLYWOOD COURT
FALCON HEIGHTS, MN 55108

Occupant
1617 HOLLYWOOD COURT
FALCON HEIGHTS, MN 55108

Occupant
1618 HOLLYWOOD COURT
FALCON HEIGHTS, MN 55108

Occupant
1624 HOLLYWOOD COURT
FALCON HEIGHTS, MN 55108

Occupant
1625 HOLLYWOOD COURT
FALCON HEIGHTS, MN 55108

Occupant
1627 HOLLYWOOD COURT
FALCON HEIGHTS, MN 55108

Occupant
1630 HOLLYWOOD COURT
FALCON HEIGHTS, MN 55108

COX BUILDING LLC
1639 LARPENTEUR AVE W
FALCON HEIGHTS MN 55113-5763

Occupant
1667 E SNELLING AVENUE NORTH
APARTMENT 206
FALCON HEIGHTS, MN 55108

Occupant
1667 E SNELLING AVENUE NORTH
APARTMENT 318
FALCON HEIGHTS, MN 55108

Occupant
1667 E SNELLING AVENUE NORTH
APARTMENT 319
FALCON HEIGHTS, MN 55108

Occupant
1667 E SNELLING AVENUE NORTH
APARTMENT 323
FALCON HEIGHTS, MN 55108

Occupant
1667 E SNELLING AVENUE NORTH
APARTMENT 214
FALCON HEIGHTS, MN 55108

Occupant
1667 E SNELLING AVENUE NORTH
APARTMENT 213
FALCON HEIGHTS, MN 55108

Occupant
1667 E SNELLING AVENUE NORTH
APARTMENT 212
FALCON HEIGHTS, MN 55108

Occupant
1667 E SNELLING AVENUE NORTH
APARTMENT 211
FALCON HEIGHTS, MN 55108

Occupant
1667 E SNELLING AVENUE NORTH
APARTMENT 210
FALCON HEIGHTS, MN 55108

Occupant
1667 E SNELLING AVENUE NORTH
APARTMENT 209
FALCON HEIGHTS, MN 55108

Occupant
1667 E SNELLING AVENUE NORTH
APARTMENT 121
FALCON HEIGHTS, MN 55108

Occupant
1667 E SNELLING AVENUE NORTH
APARTMENT 207
FALCON HEIGHTS, MN 55108

Occupant
1667 E SNELLING AVENUE NORTH
APARTMENT 205
FALCON HEIGHTS, MN 55108

Occupant
1667 E SNELLING AVENUE NORTH
APARTMENT 204
FALCON HEIGHTS, MN 55108

Occupant
1667 E SNELLING AVENUE NORTH
APARTMENT 203
FALCON HEIGHTS, MN 55108

Occupant
1667 E SNELLING AVENUE NORTH
APARTMENT 201
FALCON HEIGHTS, MN 55108

Occupant
1667 E SNELLING AVENUE NORTH
APARTMENT 125
FALCON HEIGHTS, MN 55108

Occupant
1667 E SNELLING AVENUE NORTH
APARTMENT 124
FALCON HEIGHTS, MN 55108

Occupant
1667 E SNELLING AVENUE NORTH
APARTMENT 311
FALCON HEIGHTS, MN 55108

Occupant
1667 E SNELLING AVENUE NORTH
APARTMENT 123
FALCON HEIGHTS, MN 55108

Occupant
1667 E SNELLING AVENUE NORTH
APARTMENT 122
FALCON HEIGHTS, MN 55108

Occupant
1667 E SNELLING AVENUE NORTH
APARTMENT 215
FALCON HEIGHTS, MN 55108

Occupant
1667 E SNELLING AVENUE NORTH
APARTMENT 208
FALCON HEIGHTS, MN 55108

Occupant
1667 E SNELLING AVENUE NORTH
APARTMENT 325
FALCON HEIGHTS, MN 55108

Occupant
1667 E SNELLING AVENUE NORTH
APARTMENT 303
FALCON HEIGHTS, MN 55108

Occupant
1667 E SNELLING AVENUE NORTH
APARTMENT 304
FALCON HEIGHTS, MN 55108

Occupant
1667 E SNELLING AVENUE NORTH
APARTMENT 305
FALCON HEIGHTS, MN 55108

Occupant
1667 E SNELLING AVENUE NORTH
APARTMENT 307
FALCON HEIGHTS, MN 55108

Occupant
1667 E SNELLING AVENUE NORTH
APARTMENT 308
FALCON HEIGHTS, MN 55108

Occupant
1667 E SNELLING AVENUE NORTH
APARTMENT 309
FALCON HEIGHTS, MN 55108

Occupant
1667 E SNELLING AVENUE NORTH
APARTMENT 310
FALCON HEIGHTS, MN 55108

Occupant
1667 E SNELLING AVENUE NORTH
APARTMENT 225
FALCON HEIGHTS, MN 55108

Occupant
1667 E SNELLING AVENUE NORTH
APARTMENT 223
FALCON HEIGHTS, MN 55108

Occupant
1667 E SNELLING AVENUE NORTH
APARTMENT 221
FALCON HEIGHTS, MN 55108

Occupant
1667 E SNELLING AVENUE NORTH
APARTMENT 222
FALCON HEIGHTS, MN 55108

Occupant
1667 E SNELLING AVENUE NORTH
APARTMENT 317
FALCON HEIGHTS, MN 55108

Occupant
1667 E SNELLING AVENUE NORTH
APARTMENT 312
FALCON HEIGHTS, MN 55108

Occupant
1667 E SNELLING AVENUE NORTH
APARTMENT 220
FALCON HEIGHTS, MN 55108

Occupant
1667 E SNELLING AVENUE NORTH
APARTMENT 219
FALCON HEIGHTS, MN 55108

Occupant
1667 E SNELLING AVENUE NORTH
APARTMENT 313
FALCON HEIGHTS, MN 55108

Occupant
1667 E SNELLING AVENUE NORTH
APARTMENT 218
FALCON HEIGHTS, MN 55108

Occupant
1667 E SNELLING AVENUE NORTH
APARTMENT 217
FALCON HEIGHTS, MN 55108

Occupant
1667 E SNELLING AVENUE NORTH
APARTMENT 314
FALCON HEIGHTS, MN 55108

Occupant
1667 E SNELLING AVENUE NORTH
APARTMENT 216
FALCON HEIGHTS, MN 55108

Occupant
1667 E SNELLING AVENUE NORTH
APARTMENT 315
FALCON HEIGHTS, MN 55108

Occupant
1667 E SNELLING AVENUE NORTH
APARTMENT 316
FALCON HEIGHTS, MN 55108

Occupant
1667 E SNELLING AVENUE NORTH
APARTMENT 119
FALCON HEIGHTS, MN 55108

Occupant
1667 E SNELLING AVENUE NORTH
APARTMENT 010
FALCON HEIGHTS, MN 55108

Occupant
1667 E SNELLING AVENUE NORTH
APARTMENT 021
FALCON HEIGHTS, MN 55108

Occupant
1667 E SNELLING AVENUE NORTH
APARTMENT 020
FALCON HEIGHTS, MN 55108

Occupant
1667 E SNELLING AVENUE NORTH
APARTMENT 019
FALCON HEIGHTS, MN 55108

Occupant
1667 E SNELLING AVENUE NORTH
APARTMENT 018
FALCON HEIGHTS, MN 55108

Occupant
1667 E SNELLING AVENUE NORTH
APARTMENT 017
FALCON HEIGHTS, MN 55108

Occupant
1667 E SNELLING AVENUE NORTH
APARTMENT 401
FALCON HEIGHTS, MN 55108

Occupant
1667 E SNELLING AVENUE NORTH
APARTMENT 015
FALCON HEIGHTS, MN 55108

Occupant
1667 E SNELLING AVENUE NORTH
APARTMENT 202
FALCON HEIGHTS, MN 55108

Occupant
1667 E SNELLING AVENUE NORTH
APARTMENT 013
FALCON HEIGHTS, MN 55108

Occupant
1667 E SNELLING AVENUE NORTH
APARTMENT 022
FALCON HEIGHTS, MN 55108

Occupant
1667 E SNELLING AVENUE NORTH
APARTMENT 011
FALCON HEIGHTS, MN 55108

Occupant
1667 E SNELLING AVENUE NORTH
APARTMENT 016
FALCON HEIGHTS, MN 55108

Occupant
1667 E SNELLING AVENUE NORTH
APARTMENT 009
FALCON HEIGHTS, MN 55108

Occupant
1667 E SNELLING AVENUE NORTH
APARTMENT 008
FALCON HEIGHTS, MN 55108

Occupant
1667 E SNELLING AVENUE NORTH
APARTMENT 007
FALCON HEIGHTS, MN 55108

Occupant
1667 E SNELLING AVENUE NORTH
APARTMENT 006
FALCON HEIGHTS, MN 55108

Occupant
1667 E SNELLING AVENUE NORTH
APARTMENT 005
FALCON HEIGHTS, MN 55108

Occupant
1667 E SNELLING AVENUE NORTH
APARTMENT 004
FALCON HEIGHTS, MN 55108

Occupant
1667 E SNELLING AVENUE NORTH
APARTMENT 003
FALCON HEIGHTS, MN 55108

Occupant
1667 E SNELLING AVENUE NORTH
APARTMENT 002
FALCON HEIGHTS, MN 55108

Occupant
1667 E SNELLING AVENUE NORTH
APARTMENT 001
FALCON HEIGHTS, MN 55108

Occupant
1667 E SNELLING AVENUE NORTH
APARTMENT 301
FALCON HEIGHTS, MN 55108

Occupant
1667 E SNELLING AVENUE NORTH
APARTMENT 012
FALCON HEIGHTS, MN 55108

Occupant
1667 E SNELLING AVENUE NORTH
APARTMENT 114
FALCON HEIGHTS, MN 55108

Occupant
1667 E SNELLING AVENUE NORTH
APARTMENT 302
FALCON HEIGHTS, MN 55108

Occupant
1667 E SNELLING AVENUE NORTH
APARTMENT 403
FALCON HEIGHTS, MN 55108

Occupant
1667 E SNELLING AVENUE NORTH
APARTMENT 306
FALCON HEIGHTS, MN 55108

Occupant
1667 E SNELLING AVENUE NORTH
APARTMENT 118
FALCON HEIGHTS, MN 55108

Occupant
1667 E SNELLING AVENUE NORTH
APARTMENT 014
FALCON HEIGHTS, MN 55108

Occupant
1667 E SNELLING AVENUE NORTH
APARTMENT 402
FALCON HEIGHTS, MN 55108

Occupant
1667 E SNELLING AVENUE NORTH
APARTMENT 023
FALCON HEIGHTS, MN 55108

Occupant
1667 E SNELLING AVENUE NORTH
APARTMENT 120
FALCON HEIGHTS, MN 55108

Occupant
1667 E SNELLING AVENUE NORTH
APARTMENT 115
FALCON HEIGHTS, MN 55108

Occupant
1667 E SNELLING AVENUE NORTH
APARTMENT 117
FALCON HEIGHTS, MN 55108

Occupant
1667 E SNELLING AVENUE NORTH
APARTMENT 113
FALCON HEIGHTS, MN 55108

Occupant
1667 E SNELLING AVENUE NORTH
APARTMENT 106
FALCON HEIGHTS, MN 55108

Occupant
1667 E SNELLING AVENUE NORTH
APARTMENT 101
FALCON HEIGHTS, MN 55108

Occupant
1667 E SNELLING AVENUE NORTH
APARTMENT 102
FALCON HEIGHTS, MN 55108

Occupant
1667 E SNELLING AVENUE NORTH
APARTMENT 103
FALCON HEIGHTS, MN 55108

Occupant
1667 E SNELLING AVENUE NORTH
APARTMENT 116
FALCON HEIGHTS, MN 55108

Occupant
1667 E SNELLING AVENUE NORTH
APARTMENT 105
FALCON HEIGHTS, MN 55108

Occupant
1667 E SNELLING AVENUE NORTH
APARTMENT 112
FALCON HEIGHTS, MN 55108

Occupant
1667 E SNELLING AVENUE NORTH
APARTMENT 107
FALCON HEIGHTS, MN 55108

Occupant
1667 E SNELLING AVENUE NORTH
APARTMENT 108
FALCON HEIGHTS, MN 55108

Occupant
1667 E SNELLING AVENUE NORTH
APARTMENT 109
FALCON HEIGHTS, MN 55108

Occupant
1667 E SNELLING AVENUE NORTH
APARTMENT 110
FALCON HEIGHTS, MN 55108

Occupant
1667 E SNELLING AVENUE NORTH
APARTMENT 111
FALCON HEIGHTS, MN 55108

Occupant
1667 E SNELLING AVENUE NORTH
APARTMENT 104
FALCON HEIGHTS, MN 55108

Occupant
1667 W SNELLING AVENUE NORTH
APARTMENT 138
FALCON HEIGHTS, MN 55108

Occupant
1667 W SNELLING AVENUE NORTH
APARTMENT 139
FALCON HEIGHTS, MN 55108

Occupant
1667 W SNELLING AVENUE NORTH
APARTMENT 137
FALCON HEIGHTS, MN 55108

Occupant
1667 W SNELLING AVENUE NORTH
APARTMENT 136
FALCON HEIGHTS, MN 55108

Occupant
1667 W SNELLING AVENUE NORTH
APARTMENT 135
FALCON HEIGHTS, MN 55108

Occupant
1667 W SNELLING AVENUE NORTH
APARTMENT 134
FALCON HEIGHTS, MN 55108

Occupant
1667 W SNELLING AVENUE NORTH
APARTMENT 133
FALCON HEIGHTS, MN 55108

Occupant
1667 W SNELLING AVENUE NORTH
APARTMENT 132
FALCON HEIGHTS, MN 55108

Occupant
1667 W SNELLING AVENUE NORTH
APARTMENT 131
FALCON HEIGHTS, MN 55108

Occupant
1667 W SNELLING AVENUE NORTH
APARTMENT 130
FALCON HEIGHTS, MN 55108

Occupant
1667 W SNELLING AVENUE NORTH
APARTMENT 129
FALCON HEIGHTS, MN 55108

Occupant
1667 W SNELLING AVENUE NORTH
APARTMENT 127
FALCON HEIGHTS, MN 55108

Occupant
1667 W SNELLING AVENUE NORTH
APARTMENT 233
FALCON HEIGHTS, MN 55108

Occupant
1667 W SNELLING AVENUE NORTH
APARTMENT 226
FALCON HEIGHTS, MN 55108

Occupant
1667 W SNELLING AVENUE NORTH
APARTMENT 029
FALCON HEIGHTS, MN 55108

Occupant
1667 W SNELLING AVENUE NORTH
APARTMENT 126
FALCON HEIGHTS, MN 55108

Occupant
1667 W SNELLING AVENUE NORTH
APARTMENT 232
FALCON HEIGHTS, MN 55108

Occupant
1667 W SNELLING AVENUE NORTH
APARTMENT 239
FALCON HEIGHTS, MN 55108

Occupant
1667 W SNELLING AVENUE NORTH
APARTMENT 041
FALCON HEIGHTS, MN 55108

Occupant
1667 W SNELLING AVENUE NORTH
APARTMENT 238
FALCON HEIGHTS, MN 55108

Occupant
1667 W SNELLING AVENUE NORTH
APARTMENT 040
FALCON HEIGHTS, MN 55108

Occupant
1667 W SNELLING AVENUE NORTH
APARTMENT 237
FALCON HEIGHTS, MN 55108

Occupant
1667 W SNELLING AVENUE NORTH
APARTMENT 039
FALCON HEIGHTS, MN 55108

Occupant
1667 W SNELLING AVENUE NORTH
APARTMENT 236
FALCON HEIGHTS, MN 55108

Occupant
1667 W SNELLING AVENUE NORTH
APARTMENT 038
FALCON HEIGHTS, MN 55108

Occupant
1667 W SNELLING AVENUE NORTH
APARTMENT 235
FALCON HEIGHTS, MN 55108

Occupant
1667 W SNELLING AVENUE NORTH
APARTMENT 037
FALCON HEIGHTS, MN 55108

Occupant
1667 W SNELLING AVENUE NORTH
APARTMENT 033
FALCON HEIGHTS, MN 55108

Occupant
1667 W SNELLING AVENUE NORTH
APARTMENT 036
FALCON HEIGHTS, MN 55108

Occupant
1667 W SNELLING AVENUE NORTH
APARTMENT 240
FALCON HEIGHTS, MN 55108

Occupant
1667 W SNELLING AVENUE NORTH
APARTMENT 035
FALCON HEIGHTS, MN 55108

Occupant
1667 W SNELLING AVENUE NORTH
APARTMENT 231
FALCON HEIGHTS, MN 55108

Occupant
1667 W SNELLING AVENUE NORTH
APARTMENT 034
FALCON HEIGHTS, MN 55108

Occupant
1667 W SNELLING AVENUE NORTH
APARTMENT 140
FALCON HEIGHTS, MN 55108

Occupant
1667 W SNELLING AVENUE NORTH
APARTMENT 230
FALCON HEIGHTS, MN 55108

Occupant
1667 W SNELLING AVENUE NORTH
APARTMENT 229
FALCON HEIGHTS, MN 55108

Occupant
1667 W SNELLING AVENUE NORTH
APARTMENT 032
FALCON HEIGHTS, MN 55108

Occupant
1667 W SNELLING AVENUE NORTH
APARTMENT 228
FALCON HEIGHTS, MN 55108

Occupant
1667 W SNELLING AVENUE NORTH
APARTMENT 031
FALCON HEIGHTS, MN 55108

Occupant
1667 W SNELLING AVENUE NORTH
APARTMENT 227
FALCON HEIGHTS, MN 55108

Occupant
1667 W SNELLING AVENUE NORTH
APARTMENT 030
FALCON HEIGHTS, MN 55108

Occupant
1667 W SNELLING AVENUE NORTH
APARTMENT 234
FALCON HEIGHTS, MN 55108

RANDI WINTER
1683 LARPENTEUR AVE W
FALCON HEIGHTS MN 55113-5704

Occupant
1687 FRY STREET
APARTMENT 12
FALCON HEIGHTS, MN 55113

Occupant
1687 FRY STREET
APARTMENT 17
FALCON HEIGHTS, MN 55113

Occupant
1687 FRY STREET
APARTMENT 16
FALCON HEIGHTS, MN 55113

Occupant
1687 FRY STREET
APARTMENT 15
FALCON HEIGHTS, MN 55113

Occupant
1687 FRY STREET
APARTMENT 1
FALCON HEIGHTS, MN 55113

Occupant
1687 FRY STREET
APARTMENT 13
FALCON HEIGHTS, MN 55113

Occupant
1687 FRY STREET
APARTMENT 11
FALCON HEIGHTS, MN 55113

Occupant
1687 FRY STREET
APARTMENT 10
FALCON HEIGHTS, MN 55113

Occupant
1687 FRY STREET
APARTMENT 8
FALCON HEIGHTS, MN 55113

Occupant
1687 FRY STREET
APARTMENT 7
FALCON HEIGHTS, MN 55113

Occupant
1687 FRY STREET
APARTMENT 6
FALCON HEIGHTS, MN 55113

Occupant
1687 FRY STREET
APARTMENT 5
FALCON HEIGHTS, MN 55113

Occupant
1687 FRY STREET
APARTMENT 4
FALCON HEIGHTS, MN 55113

Occupant
1687 FRY STREET
APARTMENT 3
FALCON HEIGHTS, MN 55113

Occupant
1687 FRY STREET
APARTMENT 2
FALCON HEIGHTS, MN 55113

Occupant
1687 FRY STREET
APARTMENT 9
FALCON HEIGHTS, MN 55113

Occupant
1687 FRY STREET
APARTMENT 14
FALCON HEIGHTS, MN 55113

Occupant
1687 LARPENTEUR AVENUE WEST
FALCON HEIGHTS, MN 55113

Occupant
1697 FRY STREET
APARTMENT 10
FALCON HEIGHTS, MN 55113

Occupant
1697 FRY STREET
APARTMENT 11
FALCON HEIGHTS, MN 55113

Occupant
1697 FRY STREET
APARTMENT 17
FALCON HEIGHTS, MN 55113

Occupant
1697 FRY STREET
APARTMENT 13
FALCON HEIGHTS, MN 55113

Occupant
1697 FRY STREET
APARTMENT 12
FALCON HEIGHTS, MN 55113

Occupant
1697 FRY STREET
APARTMENT 15
FALCON HEIGHTS, MN 55113

Occupant
1697 FRY STREET
APARTMENT 9
FALCON HEIGHTS, MN 55113

Occupant
1697 FRY STREET
APARTMENT 16
FALCON HEIGHTS, MN 55113

Occupant
1697 FRY STREET
APARTMENT 7
FALCON HEIGHTS, MN 55113

Occupant
1697 FRY STREET
APARTMENT 6
FALCON HEIGHTS, MN 55113

Occupant
1697 FRY STREET
APARTMENT 5
FALCON HEIGHTS, MN 55113

Occupant
1697 FRY STREET
APARTMENT 4
FALCON HEIGHTS, MN 55113

Occupant
1697 FRY STREET
APARTMENT 3
FALCON HEIGHTS, MN 55113

Occupant
1697 FRY STREET
APARTMENT 2
FALCON HEIGHTS, MN 55113

Occupant
1697 FRY STREET
APARTMENT 1
FALCON HEIGHTS, MN 55113

Occupant
1697 FRY STREET
APARTMENT 14
FALCON HEIGHTS, MN 55113

Occupant
1697 FRY STREET
APARTMENT 8
FALCON HEIGHTS, MN 55113

Occupant
1700 FRY STREET
FALCON HEIGHTS, MN 55113

Occupant
1700 SAINT MARYS STREET
FALCON HEIGHTS, MN 55113

Occupant
1703 SAINT MARYS STREET
FALCON HEIGHTS, MN 55113

Occupant
1707 FRY STREET
APARTMENT 10
FALCON HEIGHTS, MN 55113

Occupant
1707 FRY STREET
APARTMENT 17
FALCON HEIGHTS, MN 55113

Occupant
1707 FRY STREET
APARTMENT 16
FALCON HEIGHTS, MN 55113

Occupant
1707 FRY STREET
APARTMENT 15
FALCON HEIGHTS, MN 55113

Occupant
1707 FRY STREET
APARTMENT 14
FALCON HEIGHTS, MN 55113

Occupant
1707 FRY STREET
APARTMENT 3
FALCON HEIGHTS, MN 55113

Occupant
1707 FRY STREET
APARTMENT 13
FALCON HEIGHTS, MN 55113

Occupant
1707 FRY STREET
APARTMENT 12
FALCON HEIGHTS, MN 55113

Occupant
1707 FRY STREET
APARTMENT 11
FALCON HEIGHTS, MN 55113

Occupant
1707 FRY STREET
APARTMENT 9
FALCON HEIGHTS, MN 55113

Occupant
1707 FRY STREET
APARTMENT 8
FALCON HEIGHTS, MN 55113

Occupant
1707 FRY STREET
APARTMENT 7
FALCON HEIGHTS, MN 55113

Occupant
1707 FRY STREET
APARTMENT 6
FALCON HEIGHTS, MN 55113

Occupant
1707 FRY STREET
APARTMENT 4
FALCON HEIGHTS, MN 55113

Occupant
1707 FRY STREET
APARTMENT 2
FALCON HEIGHTS, MN 55113

Occupant
1707 FRY STREET
APARTMENT 1
FALCON HEIGHTS, MN 55113

Occupant
1707 FRY STREET
APARTMENT 5
FALCON HEIGHTS, MN 55113

Occupant
1710 FRY STREET
FALCON HEIGHTS, MN 55113

Occupant
1710 SAINT MARYS STREET
FALCON HEIGHTS, MN 55113

Occupant
1711 SAINT MARYS STREET
FALCON HEIGHTS, MN 55113

Occupant
1713 SAINT MARYS STREET
FALCON HEIGHTS, MN 55113

Occupant
1717 FRY STREET
APARTMENT 12
FALCON HEIGHTS, MN 55113

Occupant
1717 FRY STREET
APARTMENT 17
FALCON HEIGHTS, MN 55113

Occupant
1717 FRY STREET
APARTMENT 16
FALCON HEIGHTS, MN 55113

Occupant
1717 FRY STREET
APARTMENT 15
FALCON HEIGHTS, MN 55113

Occupant
1717 FRY STREET
APARTMENT 13
FALCON HEIGHTS, MN 55113

Occupant
1717 FRY STREET
APARTMENT 11
FALCON HEIGHTS, MN 55113

Occupant
1717 FRY STREET
APARTMENT 10
FALCON HEIGHTS, MN 55113

Occupant
1717 FRY STREET
APARTMENT 9
FALCON HEIGHTS, MN 55113

Occupant
1717 FRY STREET
APARTMENT 7
FALCON HEIGHTS, MN 55113

Occupant
1717 FRY STREET
APARTMENT 6
FALCON HEIGHTS, MN 55113

Occupant
1717 FRY STREET
APARTMENT 5
FALCON HEIGHTS, MN 55113

Occupant
1717 FRY STREET
APARTMENT 4
FALCON HEIGHTS, MN 55113

Occupant
1717 FRY STREET
APARTMENT 3
FALCON HEIGHTS, MN 55113

Occupant
1717 FRY STREET
APARTMENT 2
FALCON HEIGHTS, MN 55113

Occupant
1717 FRY STREET
APARTMENT 1
FALCON HEIGHTS, MN 55113

Occupant
1717 FRY STREET
APARTMENT 14
FALCON HEIGHTS, MN 55113

Occupant
1717 FRY STREET
APARTMENT 8
FALCON HEIGHTS, MN 55113

Occupant
1718 FRY STREET
FALCON HEIGHTS, MN 55113

WARNER PROPERTIES OF MN LLP
2011 UPPER ST DENNIS RD
ST PAUL MN 55116-1186

REGENTS OF U OF M
319 15TH AVE SE
MINNEAPOLIS MN 55455-0179

FALCON HEIGHTS PROPERTY LLC
4505 WHITE BEAR PKWY
WHITE BEAR LAKE MN 55110-3610

1717 FRY COMPANY LP
5201 E RIVER RD STE 308
MINNEAPOLIS MN 55421-1035

ANNA SPIEGLER
5201 E RIVER RD STE 308
FRIDLEY MN 55421-1035

BUHL LARPENTEUR WEST LLC
5353 WAYZATA BLVD # 502
SAINT LOUIS PARK MN 55416-1340

BUHL GTA LP
7800 METRO PKWY STE 300
BLOOMINGTON MN 55425-1509

LARPENTEUR MANOR LLC
844 GRAND AVE STE 4
SAINT PAUL MN 55105-3376

IH3 PROPERTY MINNESOTA LP
PO BOX 4698
LOGAN UT 84323-4698

DAMIAN HANFT
PO BOX 583322
MINNEAPOLIS, MN 55438-3322

VELAIR DEVELOPMENT COMPANY
ATTN. MARTY O'CONNELL
7645 LYNDALE AVE SOUTH, STE 300
MINNEAPOLIS, MN 55423

Sec. 113-35 - Amendments

(a) *Initiation of amendments*. An amendment to this chapter may be initiated by the city council, the planning commission, or by petition of a property owner whose property would be affected by the proposed amendment.

(b) *Application for amendment*. All applications for amendments initiated by a property owner shall be filed with the zoning administrator on an official application form. The application shall be accompanied by a fee established by city council resolution and a cash escrow, in an amount determined by the zoning administrator, to reimburse the city for all out-of-pocket costs the city may incur in reviewing the application. When the amendment involves the changing of zoning district boundaries, the application shall be accompanied by an abstractor's certified property certificate listing the property owners within 350 feet of the boundaries of the property to which the amendment relates.

(c) *Public hearing*. When a proposed amendment to this chapter has been properly initiated, the city clerk shall call a public hearing before the planning commission. A notice of the time, place, and purpose of the hearing shall be published in the city's official newspaper at least ten days prior to the hearing. When an amendment involves changes in district boundaries affecting an area of five acres or less, a similar notice shall be mailed at least ten days before the date of the hearing to each owner of affected property and property situated wholly or partly within 350 feet of the property to which the amendment relates. The failure to give mailed notice to individual property owners, or defects in the notice shall not invalidate the proceeding, provided a bona fide attempt to comply has been made. The planning commission shall conduct the hearing and make a recommendation to the city council.

(d) *Action by city council*. The city council shall not act upon a proposed amendment until it has received the recommendation of the planning commission or until 60 days after the first regular planning commission meeting at which the proposed amendment was considered.

(e) *Consistency with comprehensive plan*. No amendment to this chapter shall be adopted which is in conflict with the city's comprehensive plan.

(f) *Time deadline; approval requirements*. Pursuant to Minn. Stats. § 15.99, an application for an amendment must be approved or denied within 60 days from the date a properly completed application is received by the city unless the time period is waived by the applicant or extended as provided by statute. Approval of an amendment shall require a majority vote of all the members of the city council. Amendments which change all or part of the existing classification of a zoning district from residential to either commercial or industrial require a two-thirds majority vote of all members of city council.

(Code 1993, § 9-15.05; Ord. No. 97-06, § 1, 9-24-1997)

State Law reference – Amendments, Minn. Stats. § 462.357, subds. 2 – 4.

Fairway Commons PUD – Comments from City Engineering:

- C3.0 – Add a note to the grading plan that no construction traffic is allowed over the BMP(s) during any phase of the project
- C3.0 – Add a note to the grading plan that no wheeled machines shall be used to excavate BMP(s), and/or during the backfilling.
- C3.0 – Add a note to the Grading Plan to notify City of Roseville Engineering Dept. at 651-792-7004, at least 24 hours prior to the construction of stormwater BMPs.
- C4.0 - Existing public manholes within/near the infiltration basins will be protected during construction.
- C4.0 - Pretreatment of stormwater is required prior to water entering the BMPs
- C4.0 - Proposed pipe alignment should be moved north so any future work by the City can be completed without having to remove curb and sidewalk.
- C4.0 - Proposed pipe alignment will require a new easement be recorded in favor of the City over the pipe sufficient to achieve a 1:1 slope from edge of pipe (minimum 20′ wide). Any existing public easements not encumbering a public stormwater pipe shall be vacated.
- C5.1 – Add a note to the Bio-infiltration Basin detail that the basin shall be ripped with a toothed bucket to remove soil interface, prior to installing backfill material
- Confirm berm height is a minimum of 6″ higher than 100yr HWL for basin(s).
    - Curb cuts: Rain Guardian Turret, or approved alt.
- L1.0 – Recommend modifying the wet seed mix in the bottom of the infiltration basin. The basin shouldn't be saturated enough for a long enough period to sustain this mix.
    - MH12: sump w/ a baffle or a snout or an approved alt.
- SW1.1 – Add a note to the Erosion Control Sheet to notify City of Roseville Engineering Dept. at 651-792-7004, prior to beginning any and all construction activity to verify Erosion Control Measures are in place.
- SW1.1 – Submit contact information for the trained erosion control coordinator responsible for implementing the Stormwater Pollution Prevention Plan (SWPPP) for the site. If that person has not been selected, a SWPPP Amendment is required prior to construction.
- Provide a copy of the NDPES Permit(s), or documentation that a permit is not required.
- Provide a copy of the Ramsey County Permit(s), or documentation that a permit is not required.
- Provide a copy of the Watershed District Permit(s), or documentation that a permit is not required.
- Provide an executed Operation & Maintenance Agreement in favor of the City of Roseville that has been recorded with Ramsey County. The template agreement can be found at www.cityofroseville.com/privatebmp.

- Provide an Operation & Maintenance plan for all stormwater BMP's. The Maintenance plan should include a narrative of maintenance and inspection activities, schedule, BMP locations, design details, contact person responsible for long-term maintenance, etc. An example can be found at: www.cityofroseville.com/privatebmp.
- An Encroachment Agreement will be required for the stormwater features (curb cuts, TRM for reinforced overflows, etc.) that are over the stormwater pipe easement.
- Note that the final outlet is not publicly owned. Developer shall notify the State Fairgrounds of the work being performed on the infiltration basins and confirm drainage patterns are acceptable.
- An as-built for site grading and stormwater infrastructure will be required prior to final approval and release of Erosion Control and Grading escrow money.
- The developer shall adhere to all Ramsey County and SPRWS comments/conditions regarding transportation and potable water requirements.

Fairway Commons PUD – Comments from Ramsey County:

From: PW Plan Review
Sent: Tuesday, March 10, 2026 11:32 AM
To: Marty O'Connell; Hannah B. Lynch
Cc: Matt Pacyna; PW Plan Review
Subject: RE: [EXTERNAL] RE: 1644 Larpenteur Avenue - ROW Access

Marty and Hannah,

After reviewing the traffic study you provided and a field view of Larpenteur Ave., Ramsey County would not oppose moving access to 1644 Larpenteur Ave. 60 feet to the east as proposed, but with the following conditions.

- The center median will need to be modified or removed. There won't be enough room for westbound left turning traffic with the current median location and as highlighted in the traffic study. Having a two-way center left turn lane between Fry St. and St. Mary's St. would be acceptable to Ramsey County.
- Removing the center median will require reworking the crown of the road on the westbound/north side of Larpenteur to resolve drainage issues, as water was observed ponding against the median. This work could include removing a number of concrete panels. Having a topographic survey done on the slopes will help determine how involved this work will become to achieve the proper drainage.

Ramsey County expects the developer to be responsible for these modifications to Larpenteur Ave. Ramsey County will work with the city of Falcon Heights regarding county design requirements and construction standards should the developer want to move the access.

Thank you, and please contact me if you have any questions or want to discuss a course of action.

Kevin

Kevin Roggenbuck
(he, him)
Senior Transportation Planner
Public Works | *Economic Growth and Community Investment*
Office: 651-266-2798 Cell: 612-518-0138
15 West Kellogg Blvd., Suite 210, St. Paul, MN 55102

To: Marty O'Connell, Senior Development Associate
Velair Development Company

From: Matt Pacyna, PE, Principal
Transportation Collaborative & Consultants, LLC

Date: February 26, 2026

Subject: 1644 Larpenteur Avenue Development Traffic Study; Falcon Heights, MN

INTRODUCTION

TC2 completed a traffic study for the proposed Velair senior housing development at 1644 Larpenteur Avenue in the City of Falcon Heights. The subject site, shown in Figure 1, is generally along the south side of Larpenteur Avenue (CR 30) between Fry Street and St Mary's Street, which is about 750 feet west of Snelling Avenue (Hwy 51). The main objectives of the study are to identify existing traffic operations within the study area, evaluate potential impacts of the proposed development and associated access modification, and recommend improvements, if necessary, to ensure safe and efficient operations for all users. The following study assumptions, methodology, and findings are offered for consideration.

Figure 1 Subject Site

EXISTING CONDITIONS

Existing conditions were reviewed within the study area to establish current traffic conditions to help determine impacts associated with the proposed development. The evaluation of existing conditions included collecting traffic volumes, observing transportation characteristics, reviewing crash history, and analyzing intersection capacity, which are described in the following sections.

Traffic Volumes

Vehicular intersection turning movement counts were collected at the following locations on Wednesday February 11, 2026, as noted:

- Larpenteur Avenue (CR 30) and Fry Street / Site Access (7 to 9 a.m. and 4 to 6 p.m.)
- Larpenteur Avenue (CR 30) and St Mary's Street (6 a.m. to 7 p.m.)

The peak hours represent 7:30 to 8:30 a.m. and 4:30 to 5:30 p.m. Note that historical traffic data for the Snelling Avenue (Hwy 51) and Larpenteur Avenue (CR 30) intersection was also reviewed. Average daily traffic (ADT) volumes were provided by MnDOT or estimated based on the data collected.

Transportation Characteristics

Observations were conducted within the study area to identify various transportation characteristics such as roadway geometry, traffic controls, speed limits, and multimodal facilities. A general overview of key roadways within the study area is as follows:

- ***Larpenteur Avenue (CR 30)*** – a 4-lane minor arterial with a combination of dedicated left-turn lanes and a periodic center two-way left-turn lane. There is sidewalk along both sides of the road, and the speed limit is 35-mph.

All other study roadways are 2-lane local facilities. Each study intersection is side-street stop controlled, allowing free-flow movement along Larpenteur Avenue (CR 30). Existing geometrics, traffic controls, and volumes in the study area are shown in Figure 2.

Crash History

Five (5) years of crash history were reviewed from 2021 through 2025 using *MnDOT's Crash Mapping Analysis Tool (MnCMAT)*, which identified a total of two (2) crashes that occurred at the study intersections. One crash occurred at the Fry Street / Site Access intersection when a vehicle pulled out of the site access in 2021. The other crash was a pedestrian-related accident at the St Mary's Street intersection involving a motorist disregarding a traffic control. Neither crash resulted in a fatality or serious injury. Based on this review, there does not appear to be any safety issues from a crash frequency or severity perspective within the study area.

Intersection Capacity

Intersection capacity was evaluated using Synchro / SimTraffic Software (version 11), which uses methods outlined in the *Highway Capacity Manual, 6th Edition*. The software is used to develop calibrated models that simulate observed traffic operations, account for peaking characteristics, and identify key metrics such as intersection Level of Service (LOS) and queues. These models incorporate collected traffic, pedestrian, and bicyclist volumes, traffic controls, heavy commercial vehicle activity (i.e., buses and trucks), and driver behavior factors.

DRAFT

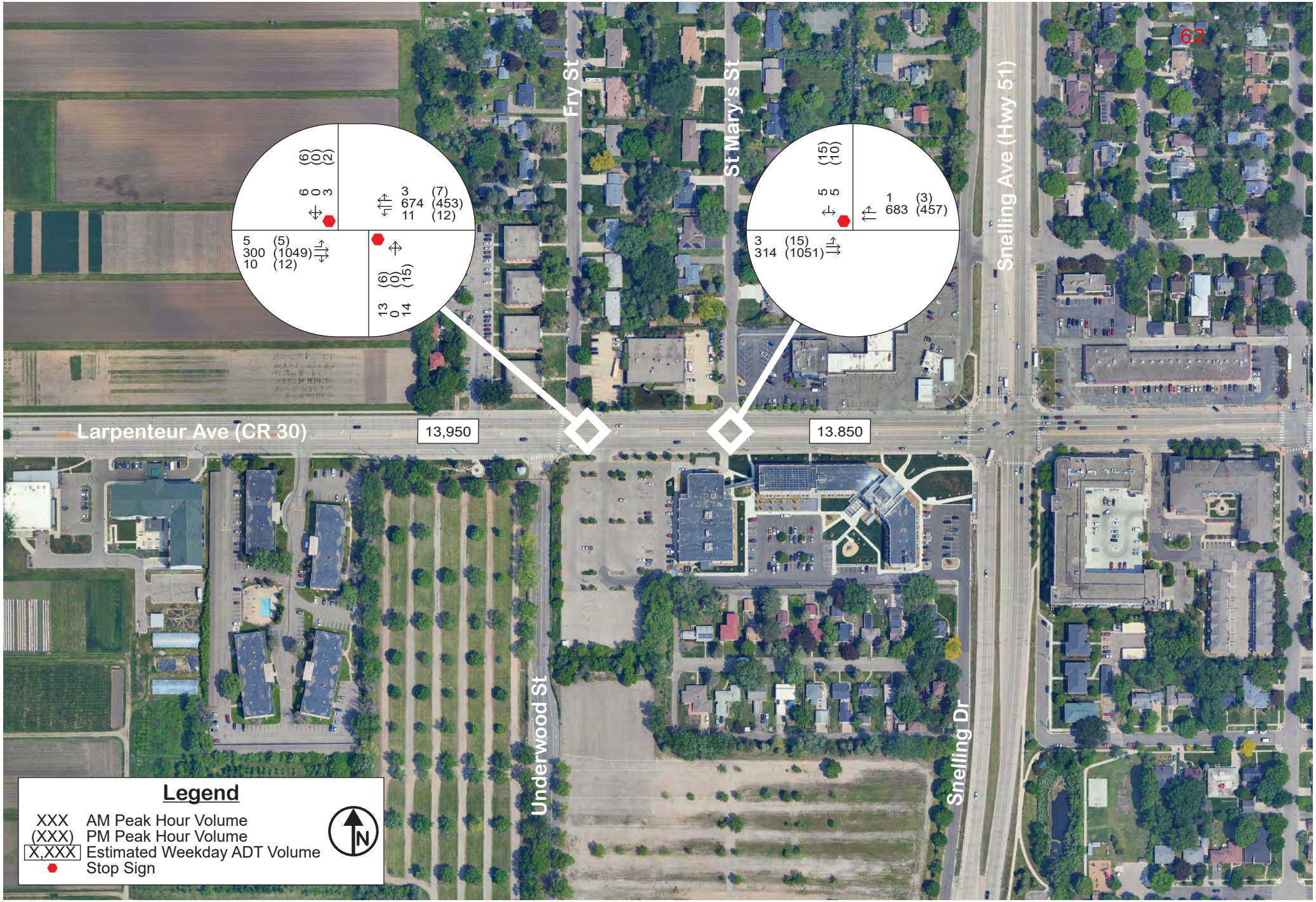

Existing Conditions

1644 Larpenteur Avenue Development Traffic Study

Figure 2

Level of Service (LOS) quantifies how an intersection is operating. Intersections are graded from LOS A to LOS F, which corresponds to the average delay per vehicle values shown. LOS A indicates the best traffic operation, while LOS F indicates an intersection where demand exceeds capacity. Overall intersection LOS A though LOS D is considered acceptable in the study area. Note that the signalized Snelling Avenue (Hwy 51) and Larpenteur Avenue (CR 30) intersection was included as part of the modeling to more accurately represent current operations; existing signal timing was provided by MnDOT.

Level of Service	Average Delay / Vehicles	
	Unsignalized	Signalized
A	< 10 seconds	< 10 seconds
B	10 to 15 seconds	10 to 20 seconds
C	15 to 25 seconds	20 to 35 seconds
D	25 to 35 seconds	35 to 55 seconds
E	35 to 50 seconds	55 to 80 seconds
F	> 50 seconds	> 80 seconds

For side-street stop-controlled intersections, special emphasis is given to providing an estimate for the level of service of the side-street approach. Traffic operations at an unsignalized intersection with side-street stop control can be described in two ways. First, consideration is given to the overall intersection level of service, which takes into account the total number of vehicles entering the intersection and the capability of the intersection to support the volumes. Second, it is important to consider the delay on the minor approach. Since the mainline does not have to stop, most delay is attributed to the side-street approaches. It is typical of intersections with higher mainline traffic volumes to experience high-levels of delay (i.e., poor levels of service) on the side-street approaches, but an acceptable overall intersection level of service during peak hour conditions. For side-street stop intersections, the overall intersection level of service is shown followed by the worst-approach level of service and delay.

The existing intersection capacity analysis results, summarized in Table 1, indicate that all study intersections and approaches operate at an acceptable LOS D or better during the typical weekday peak hours. Existing peak hour side-street queues range between one (1) and two (2) vehicles at most approaches, while peak queues in the eastbound left-turn lane at St Mary's Street and the westbound left-turn lane at the Site Access were never observed to be more than one (1) vehicle. Note that during the p.m. peak hour, eastbound queues along Larpenteur Avenue (CR 30) extended from Snelling Avenue (Hwy 51) to St Mary's Street for approximately one (1) minute but quickly dissipated. Thus, there are no significant existing operational issues from an intersection capacity perspective.

Table 1 Existing Intersection Capacity

Larpenteur Avenue (CR 30) Intersection	Traffic Control	Level of Service (delay in seconds)	
		AM Peak Hour	PM Peak Hour
Fry Street / Site Access	SSS	A / A (8)	A / C (21)
St Mary's Street	SSS	A / A (9)	A / B (12)

SSS – Side-Street-Stop

DRAFT

PROPOSED DEVELOPMENT

The proposed development, shown in Figure 3, is along the south side of Larpenteur Avenue (CR 30) between Fry Street and St Mary's Street, which is about 750 feet west of Snelling Avenue (Hwy 51). The project is a 110-unit senior (55+) multifamily residential development. Construction was assumed to be completed by the year 2028.

The existing site access along Larpenteur Avenue (CR 30) is offset from Fry Street by about 50 feet and approximately 250 feet west of St Mary's Street; this access is currently also utilized by the adjacent Amber Union apartments. As part of project, the existing access is planned to be relocated 60 feet to the east to align with the adjacent driveway aisle. This relocated access would minimize complex turning movements within the site and provide a more direct route for existing and proposed development users. Further discussion regarding this access is provided later in this report.

Figure 3 Proposed Development Site Plan

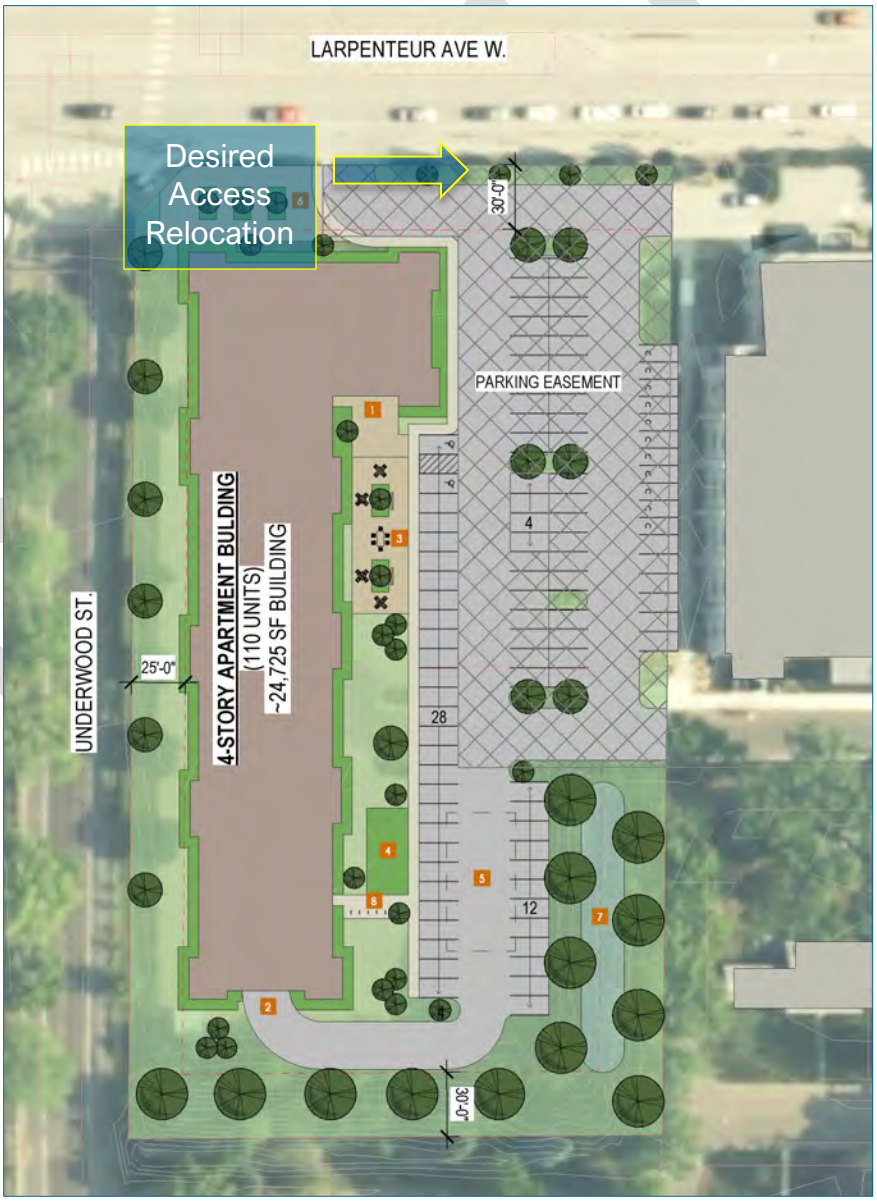

TRAFFIC FORECASTS

Traffic forecasts were developed for year 2028 build conditions, which represents year of opening. The traffic forecasts account for general background growth and trip generation from the proposed development. The following information summarizes the traffic forecast development process.

Background Growth

To account for general background growth in the study area, a one-half (0.5) percent annual growth rate was applied to the existing traffic volumes to develop year 2028 background traffic forecasts. Although daily traffic volumes have been stable or decreasing over the last 10+ years, the growth rate was applied to provide a more conservative assessment.

Proposed Development Trip Generation

A trip generation estimate for the proposed development was created using the *ITE Trip Generation Manual, 12th Edition* and includes trips for typical weekday a.m. / p.m. peak hours, as well as daily. The proposed development, shown in Table 2, is estimated to generate 21 a.m. peak hour (7 in / 14 out), 28 p.m. peak hour (15 in / 13 out), and 360 daily (180 in / 180 out) trips. No multimodal reductions were included to provide a more conservative analysis.

Table 2 Trip Generation Summary

Land Use Type *(ITE Code)*	**Size**	**AM Peak Hour**		**PM Peak Hour**		**Daily**
		In	**Out**	**In**	**Out**	
Senior Adult Housing – Multifamily *(252)*	110 units	7	14	15	13	360

Site generated trips, which are illustrated in Figure 4, were distributed to area roadways based on the global directional distribution shown, which was developed using a combination of existing travel patterns and engineering judgment. The resultant year 2028 build condition traffic forecasts are illustrated in Figure 5. Note that a future no build condition was not reviewed given the relatively short timeframe between existing and year 2028, as well as the minimal background growth anticipated.

YEAR 2028 CONDITIONS

To understand impacts associated with the proposed development, a future intersection capacity analysis was completed for year 2028 build conditions. Results of the future capacity analysis, shown in Table 3, illustrates that all study intersections and approaches will continue to operate at an acceptable LOS D or better during the typical weekday peak hours. Thus, there are no significant operational issues from an intersection capacity perspective anticipated with the addition of the proposed development. Further detail regarding the proposed access relocation is provided in the following section.

Table 3 Year 2028 Build Condition Intersection Capacity

Larpenteur Avenue (CR 30) Intersection	**Traffic Control**	**Level of Service (delay in seconds)**	
		AM Peak Hour	**PM Peak Hour**
Fry Street / Site Access	SSS	A / B (10)	A / D (32)
St Mary's Street	SSS	A / A (7)	A / B (11)

SSS – Side-Street-Stop

DRAFT

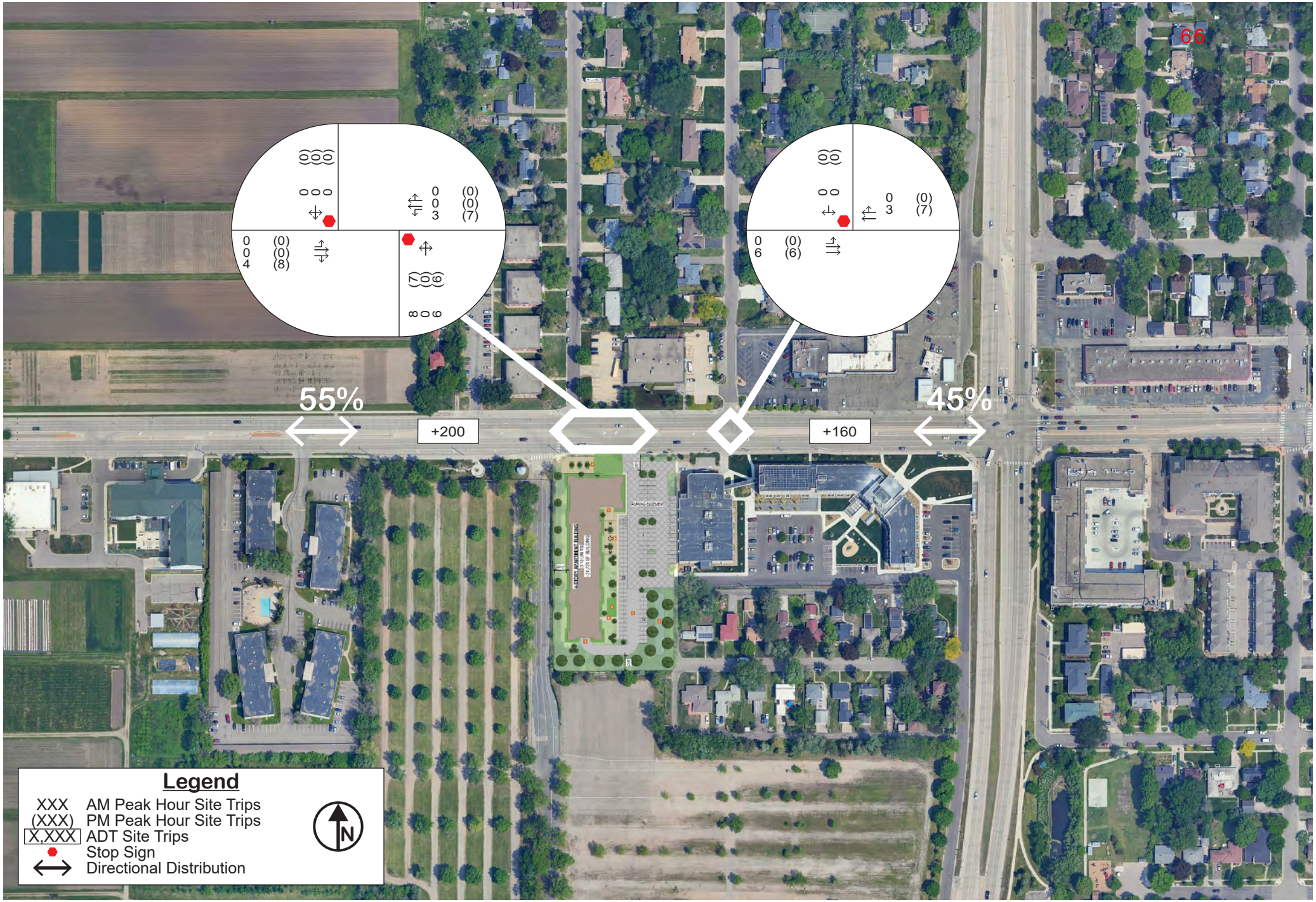

Site Generated Trips

1644 Larpenteur Avenue Development Traffic Study

Figure 4

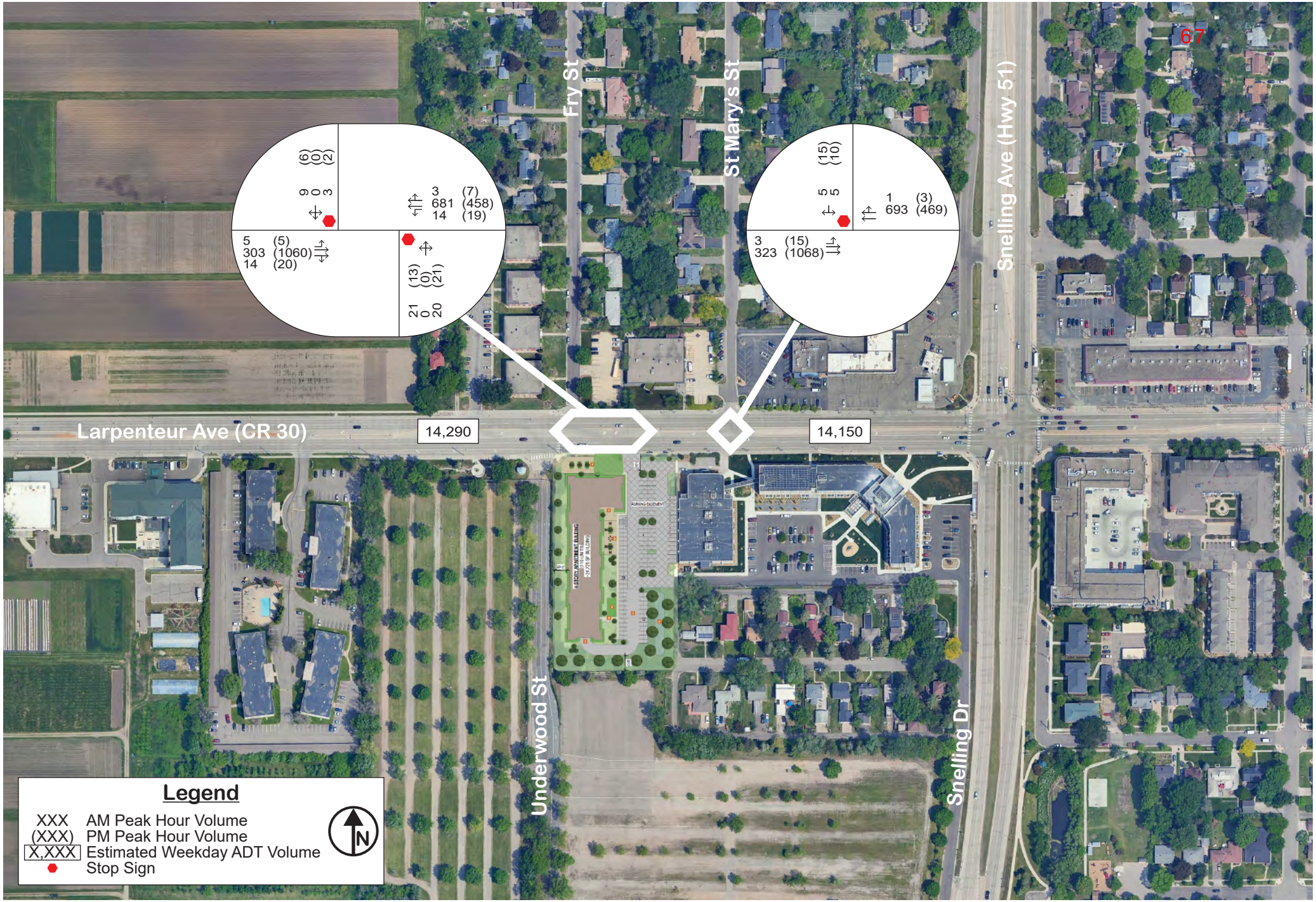

Year 2028 Build Conditions

1644 Larpenteur Avenue Development Traffic Study

Figure 5

ACCESS RELOCATION

As noted earlier, the existing access is planned to be relocated about 60 feet east of its current location along Larpenteur Avenue (CR 30). This relocated access would minimize complex turning movements within the site and provide a more direct route for existing and proposed development users. As part of the capacity analysis, queues along Larpenteur Avenue (CR 30) were reviewed to determine if this access relocation would impact operations and vehicle storage within the area.

The year 2028 build condition capacity analysis identified the following peak hour 95th percentile queues anticipated within the eastbound left-turn lane at St Mary's Street and the westbound left-turn lane at the Site Access.

- Eastbound Left-Turn at St Mary's Street – 35 feet (i.e., 1 to 2 vehicles)
- Westbound Left-Turn at the Site Access – 10 feet (i.e., ~1 vehicle)

With the planned relocation, there would be approximately 180 feet between St Mary's Street and the Site Access, which is adequate distance to accommodate the necessary vehicle stacking distance for each movement. However, there is an existing median along Larpenteur Avenue (CR 30) that limits the ability to provide the necessary turn lane storage for the relocated site access. This median was originally intended to limit access to / from the eastern driveway of the site to the north, which previously had direct access to Larpenteur Avenue (CR 30) prior to redevelopment in 2012. Thus, there is minimal benefit to maintaining the existing median in this segment.

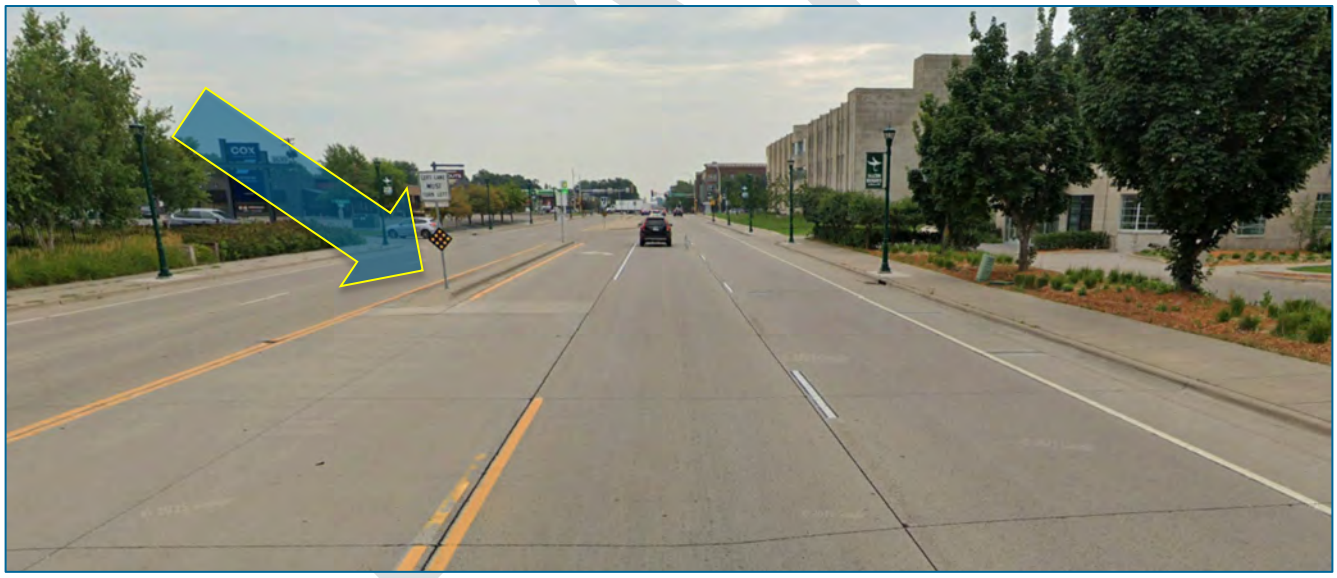

To ensure the necessary turn lane storage can be provided for St Mary's Street and the relocated Site Access, removal of the existing median along Larpenteur Avenue (CR 30) between the Site Access and St Mary's Street is recommended. In its place, the existing two-way center left-turn lane striping currently used to the west of the Site Access should be extended to St Mary's Street. Alternatively, the median could be modified to provide a continuous median between St Mary's Street and the relocated Site Access; this configuration would allow for approximately 50 foot turn lanes and a 60 foot taper area, which would also be adequate to accommodate the anticipated vehicle storage needs. Further discussion with Ramsey County staff should occur to determine the preferred configuration.

SITE PLAN CONSIDERATIONS

A review of the proposed site plan does not indicate any major issues. However, it is recommended to locate signage and landscaping to avoid creating any sight distance issues and to review truck maneuverability to limit potential internal circulation conflicts.

CONCLUSIONS

Based on the findings of the study, the following conclusions are offered for consideration.

1) There does not appear to be any safety issues from a crash frequency or severity perspective within the study area.
2) All study intersections and approaches operate at an acceptable LOS D or better during the typical weekday peak hours and there are no significant existing operational issues from an intersection capacity perspective.
3) The project is a 110-unit senior (55+) multifamily residential development. Construction was assumed to be completed by the year 2028.
4) Traffic forecasts were developed for year 2028 build conditions, which represents year of opening; the traffic forecasts account for a 0.5% annual background growth and trip generation from the proposed development.
    a. The proposed development is estimated to generate 21 a.m. peak hour (7 in / 14 out), 28 p.m. peak hour (15 in / 13 out), and 360 daily (180 in / 180 out) trips.
5) All study intersections and approaches will continue to operate at an acceptable LOS D or better during the typical weekday peak hours; there are no significant operational issues from an intersection capacity perspective anticipated with the addition of the proposed development.
6) The existing access is planned to be relocated about 60 feet east of its current location along Larpenteur Avenue (CR 30) to minimize complex turning movements within the site and provide a more direct route for existing and proposed development users.
7) To ensure the necessary turn lane storage can be provided for St Mary's Street and the relocated Site Access, removal of the existing median along Larpenteur Avenue (CR 30) between the Site Access and St Mary's Street and extending the existing two-way center left-turn lane striping is recommended.
    a. Alternatively, the median could be modified to provide a continuous median between St Mary's Street and the relocated Site Access to allow for approximately 50 foot turn lanes and a 60 foot taper area, which would also be adequate to accommodate the anticipated vehicle storage needs.
    b. Further discussion with Ramsey County staff should occur to determine the preferred Larpenteur Avenue (CR 30) configuration.
8) Locate signage and landscaping to avoid creating any sight distance issues and review truck maneuverability to limit potential internal circulation conflicts.

DRAFT

ORDINANCE NO. 26-XX

CITY OF FALCON HEIGHTS
RAMSEY COUNTY, MINNESOTA

AN ORDINANCE AMENDING CHAPTER 113 OF THE FALCON HEIGHTS CITY CODE CONCERNING AMBER FLATS PLANNED UNIT DEVELOPMENT

THE CITY COUNCIL OF FALCON HEIGHTS ORDAINS:

SECTION 1. Section 113-212 of the City Code of Falcon Heights, Minnesota is hereby amended to read as follows (additions are underlined and deletions are shown with strikethrough):

Section 113-212 – ~~Amber Flats~~Fairway Commons Planned Unit Development

(a) *Legal description.* The legal description of this PUD is as follows:

PID 212923110029: The East 250 feet of the North 500 feet except the West 150 feet of the East 160 feet of the North 283 feet of the Northwest quarter of the Northeast quarter of the Northeast quarter of Section 21, Township 29, Range 23, West of the Fourth Principal Meridian.

PID 212923110038: The West 150 feet of the East 160 feet of the North 283 feet of the Northwest quarter of the Northeast quarter of the Northeast quarter of Section 21, Township 29, Range 23, West of the Fourth Principal Meridian;
("Subject Property")

(b) *Purpose.* The purpose of the ~~Amber Flats~~Fairway Commons Planned Unit Development is to provide for ~~multi-family~~age-restricted apartments.

(c) *Permitted uses and zoning regulations.* The R-5M mixed use high density residential district regulations shall apply to the property subject to the following modifications:

a. Permitted uses:

1. One principal structure consisting of ~~117,000~~126,329 square feet and ~~96~~ 110 apartment units.

2. No conditional uses.

3. No interim uses.

4. Setbacks as depicted in the ~~Architectural Site Plan~~Site Plan, C2.0, dated ~~October 16, 2023~~_____ prepared by ~~UrbanWorks Architecture, LLC~~Civil Site Group, Inc.

Commented [HM1]: To be filled in with final plans approved by building inspector.

DRAFT

b. Parking. Vehicle parking shall be as follows:

1. ~~55~~ 44 surface parking stalls as depicted in the ~~Architectural Site Plan~~Site Plan dated _____ ~~October 16, 2023~~ prepared by ~~UrbanWorks Architecture, LLC~~Kaas Wilson Architects.
2. 72~~66~~ sublevel parking stalls as depicted in the ~~Sublevel 1 - Overall Plan~~Floor Plans – Level -1 dated _____ ~~October 16, 2023~~ prepared by ~~UrbanWorks Architecture, LLC~~Kaas Wilson Architects.

(d) *Development plan.* The PUD must be maintained in accordance with the following development plan, which is on file with the city and which is incorporated herein by reference.

(1) The following plans prepared by ~~UrbanWorks Architecture, LLC~~Kaas Wilson Architects and Civil Site Group, Inc. with up to five percent variance, to not increase nonconformities from City Code, as approved by the city administrator:

a. Architectural drawings, dated _____, prepared by Kaas Wilson Architects including:

1. Site Plan;

2. Floor Plans – Level -1;

3. Floor Plans – Level 1;

4. Floor Plans – Level 2-4;

5. Exterior Materials; and

6. Exterior Elevations.

~~a.~~b. Site development plans, dated _____ ~~October 16, 2023~~, prepared by ~~UrbanWorks Architecture, LLC~~Civil Site Group, Inc. including:

1. ~~Site demolition plan~~Removals Plan, C1.0; ~~,~~

2. ~~Erosion and sediment control plan~~Site Plan, C2.0;~~,~~

3. ~~Site dimension plan~~Overall Site Plan & Turning Movement, C2.1;~~,~~

4. ~~Grading and drainage plan~~Grading Plan, C3.0;~~,~~

5. Utility P~~p~~lan, C4.0;~~,~~

DRAFT

6. ~~Architectural site plan, including overall, sublevel 1, level 1, level 2~~Civil Details, C5.0, C5.1, C5.2;

7. ~~Building elevations~~Landscape Plan ~~,~~ L1.0;

8. Landscape Plan Notes & Details L1.1;

9. SWPPP – Existing Conditions, SW1.0;

10. SWPPP – Proposed Conditions, SW1.1;

11. SWPPP - Details, SW1.2;

12. SWPPP – Narrative, SW1.3; and

~~7.~~13. SWPPP – Attachments, SW1.4, SW1.5.

(e) *Additional conditions.* The PUD must be maintained in accordance with the following additional conditions.

(1) Trees shall be planted and/or maintained along ~~Larpenteur Avenue and Underwood Street as~~ throughout site as shown in plans submitted by ~~UrbanWorks~~Civil Site Group, Inc., dated _____ ~~10/16/2023~~.
(2) Snow storage may not be stored in any parking area for more than 48 hours.
(3) Open space as shown on plans submitted by ~~UrbanWorks~~Civil Site Group, Inc., dated, _____ ~~10/16/2023~~, ~~may not be converted into additional parking.~~must be maintained as open space and not converted to another use.
(4) Charging stations for not less than four electric vehicles must be provided on site.
~~(4)~~(5) The building may not exceed four stories, or 50' in height.

SECTION 2. Zoning Map. The zoning map of the City of Falcon Heights shall not be republished to show the aforesaid zoning, but the Clerk shall appropriately mark the zoning map on file in the Clerk's Office for the purpose of indicating the rezoning hereinabove provided for in this ordinance, and all of the notations, references, and other information shown thereon are hereby incorporated by reference and made a part of this ordinance.

SECTION 3. Effective Date. This ordinance is effective immediately upon its passage and publication.

ADOPTED this _____ day of _____, 2026, by the City Council of Falcon Heights, Minnesota.

CITY OF FALCON HEIGHTS

DRAFT

BY: _____
Randall C. Gustafson, Mayor

ATTEST:

_____
Jack Linehan, City Administrator

DRAFT

Meeting Date	March 24, 2026
Agenda Item	F-2
Attachment	See below.
Submitted By	Hannah B. Myhren, Community Development Coordinator

Item	1407 Larpenteur Acquisition – Compliance with the 2040 Comprehensive Plan
Description	The City of Falcon Heights is currently in negotiations to purchase the two parcels of property of the former "Get Pressed" dry cleaners at 1407 Larpenteur Ave. Pursuant to Minnesota Statute § 462.356, subd. 2, it is required that the City's Planning Commission review the compliance of the acquisition with the City's 2040 Comprehensive Plan. The Planning Commission must submit this in writing to City Council. The property has a long history of commercial use. Most recently, it operated as a dry cleaner, with cleaning conducted off-site. Before that, dry cleaning activities occurred on-site under a different operator. Even earlier, the site functioned as a fuel station, and sealed underground storage tanks remain in place. In 2023, the City was awarded a Brownfield Assessment Grant from the Minnesota Pollution Control Agency (MPCA). This funding supported Phase I and Phase II environmental assessments on the site, which included extensive testing of the site and nearby properties to determine the extent of pollution on the site. Over 34 soil samples were taken, and contamination was confirmed. As the property has sat vacant since the late 2010s, and the building on site has been condemned, it has become a source of blight to the surrounding neighborhoods, and frequently attracts furniture dumping and graffiti. The purpose of the acquisition is to work with agencies such as the MPCA, Ramsey County Environmental Health Services, and the Metropolitan Council to remediate the contamination on site with eventual hopes of redevelopment, utilizing grants and technical support from partners. The final use of the property has not yet been determined, but will be guided by community needs and regional priorities, likely to include opportunities to support additional housing that is both affordable and aligned with market demand. Several potential sections of the 2040 Comprehensive Plan to consider when looking into compliance with the Plan:

	- Housing Goals
	  o Support the reconstruction of dilapidated properties in an environmentally just way through equal opportunity to affordable housing repairs and energy efficiency practices.
	- General Land Use Policies
	  o Continue to eliminate zoning code violations and nuisance conditions that adversely affect the appearance and value of properties and the health of residents.
	- Neighborhood Goals
	  o To improve the quality, appearance, and maintenance of housing in neighborhoods.
	  o To continue the well-maintained residential character of existing neighborhoods.
	- Neighborhood Policies
	  o Continue to eliminate zoning code violations and nuisance conditions that adversely affect neighborhoods.
	- Environmental Protection Goals
	  o To protect people and property from excessive noise, pollution, and natural hazard.
	  o To improve the health of residents and those who work within the city.
	- Economic Development Goals
	  o To continue the growth of the City's tax base by maintaining and upgrade the existing housing stock, redeveloping blighted areas, rehabilitating deteriorating buildings and properties, retaining businesses and improving aesthetics.

Budget Impact	None.
Attachment (s)	- Survey of the Property - Minnesota Statute § 462.356 - Planning Commission Resolution 26-01 Finding that the Acquisition and Conveyance of Certain Property By The City of Falcon Heights Is/Is Not In Compliance with the City's Comprehensive Plan - City of Falcon Heights' 2040 Comprehensive Plan: https://www.falconheights.org/home/showpublisheddocument/1162/637146104931200000
Action(s) Requested	Staff requests the Planning Commission confirm if or if not the acquisition of 1407 Larpenteur is in compliance with the City's Comprehensive Plan and approve Planning Commission Resolution 26-01.

CERTIFICATE OF SURVEY for SARIN HOMES LLC

Call 48 Hours before digging
GOPHER STATE ONE CALL
Twin Cities Area 651-454-0002
MN. Toll Free 1-800-252-1166

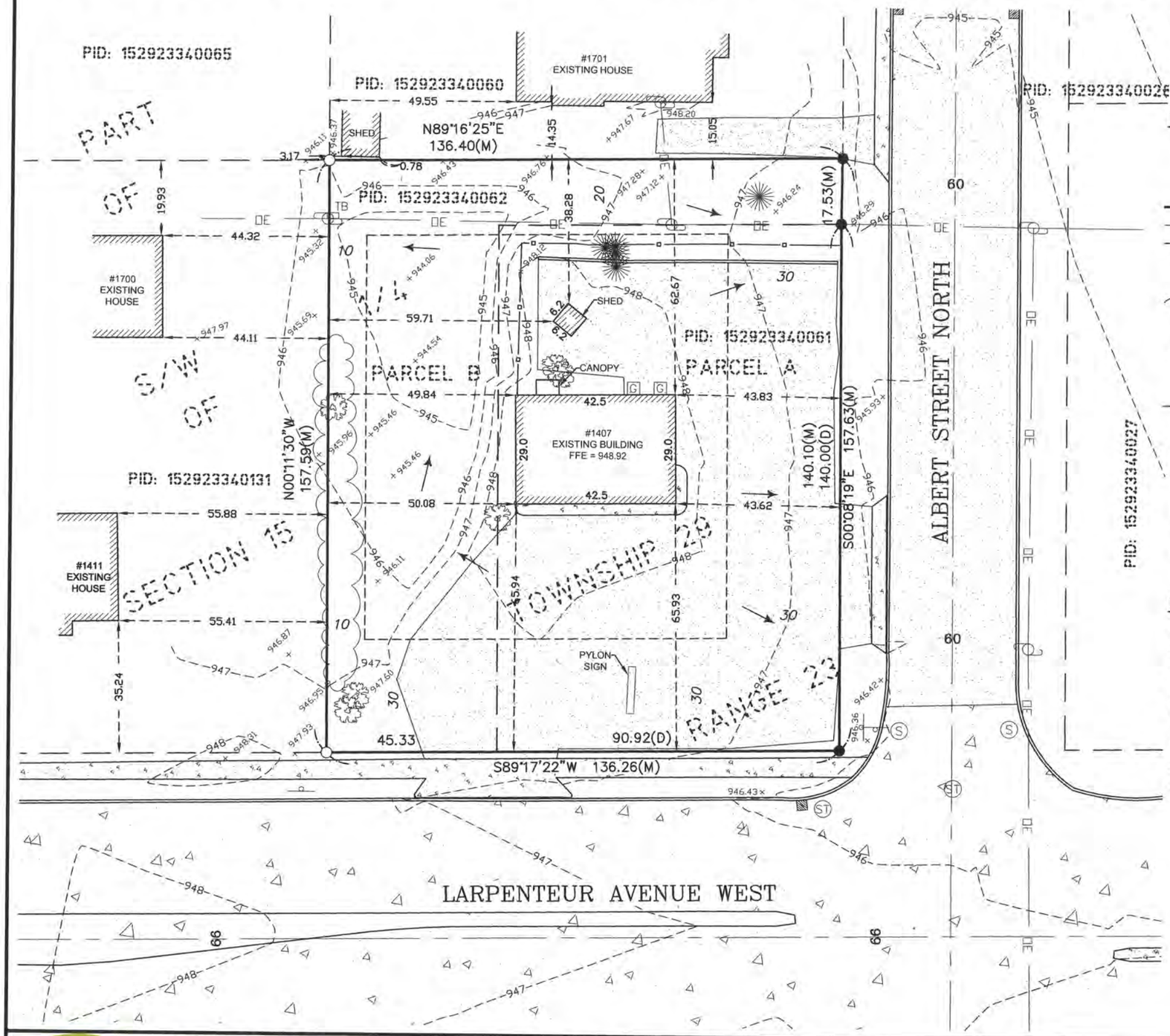

LEGEND

- DENOTES FOUND PROPERTY IRON
- DENOTES SET 1/2" X 18" REBAR WITH PLASTIC CAP "PLS 25105"
- DENOTES BOUNDARY LINE
- DENOTES LOT LINE
- DENOTES SETBACK LINE
- ×999.99 DENOTES EXISTING SPOT ELEVATION
- DENOTES CONCRETE SURFACE
- 999 DENOTES EXISTING CONTOUR LINE
- FFE DENOTES FINISH FLOOR ELEVATION
- DENOTES BITUMINOUS SURFACE
- DENOTES TREE LINE
- DENOTES DECIDUOUS TREE
- DENOTES CONIFEROUS TREE
- DENOTES CHAINLINK FENCE
- DENOTES WOOD FENCE
- OE DENOTES OVERHEAD ELECTRIC
- DENOTES ELECTRIC POWER POLE
- (M) DENOTES MEASURED DISTANCE
- (P) DENOTES PLATTED DISTANCE
- (S) DENOTES SANITARY MANHOLE
- DENOTES DRAINAGE FLOW
- (ST) DENOTES STORM SEWER MANHOLE
- DENOTES STORM CATCH BASIN (SQUARE)
- TB DENOTES TELEPHONE BOX
- DENOTES SIGN/POST
- (G) DENOTES GAS METER

EXISTING HARDCOVER

EXISTING HOUSE	1,232 SQ. FT.
EXISTING SHED	38 SQ. FT.
EXISTING CONCRETE SURFACE	163 SQ. FT.
EXISTING BITUMINOUS SURFACE	10,637 SQ. FT.
TOTAL IMPERVIOUS AREA	12,070 SQ. FT.
TOTAL LOT AREA	21,486 SQ. FT.
EXISTING HARDCOVER	56.2%

BUILDING SETBACKS

ZONING: B1 = NEIGHBORHOOD CONVENIENCE BUSINESS
HOUSE: FRONT = 30 FT
REAR = 20 FT
SIDE = 10 FT

REFERENCE BENCHMARK

ELEVATION = 970.44 MNDOT
DISK "BOSE PFE".

LEGAL DESCRIPTION

Parcel A
That part of the East Quarter of the West Half of the Southeast Quarter of the Southwest Quarter of Section 15, Township 29, Range 23 described as follows: beginning at a point 49.50 feet North and 30.00 feet West of the Southeast corner of the West Half of the Southeast Quarter of the Southwest Quarter of the aforesaid Section; thence North 140.00 feet; thence West 90.92 feet; thence South 140.00 feet; thence East 90.92 feet to the point of beginning, Ramsey County, Minnesota;

Parcel B
The South 207.00 feet of the East Quarter of the West Half of the Southeast Quarter of the Southwest Quarter of Section 15, Township 29, Range 23, except the South 189.50 feet of the East 120.92 feet thereof.

NOTES

1. THE BASIS OF THE BEARING SYSTEM IS ASSUMED.
2. NO SPECIFIC SOIL INVESTIGATION HAS BEEN COMPLETED
3. CONTRACTOR SHALL VERIFY PROPOSED ELEVATIONS.
4. NO TITLE INFORMATION WAS PROVIDED FOR THIS SURVEY. THIS SURVEY DOES NOT PURPORT TO SHOW ALL EASEMENTS OF RECORD.
5. EXISTING UTILITIES AND SERVICES SHOWN HEREON OWNER LOCATED EITHER PHYSICALLY ON THE GROUND DURING THE SURVEY OR FROM EXISTING RECORDS MADE AVAILABLE TO US OR BY RESIDENT TESTIMONY. OTHER UTILITIES AND SERVICES MAY BE PRESENT. VERIFICATION AND LOCATION OF UTILITIES AND SERVICES SHOULD BE OBTAIN FROM THE OWNERS OF RESPECTIVE UTILITIES BY CONTACTING GOPHER STATE ONE CALL AT (651) 454-0002 PRIOR TO ANY DESIGN, PLANNING OR EXCAVATION.

NO.	DATE	DESCRIPTION	BY

EDS
ENGINEERING DESIGN & SURVEYING
6480 Wayzata Blvd. Minneapolis, MN 55426
OFFICE: (763) 545-2800 FAX: (763) 545-2801
EMAIL: info@edsmn.com WEBSITE: http://edsmn.com

I HEREBY CERTIFY THAT THIS SURVEY WAS PREPARED BY ME OR UNDER MY DIRECT SUPERVISION, AND THAT I AM A DULY LICENSED LAND SURVEYOR UNDER THE LAWS OF THE STATE OF MINNESOTA.

Vlad Sivriver DATED: 04/25/2023
VLADIMIR SIVRIVER L.S. NO. 25105

JOB NAME: SARIN HOMES LLC	FIELD WORK DATE: 04/13/2023	DRAWN BY: GST	PROJECT NO.: 23-030
LOCATION: 1407 LARPENTEUR AVE. W & PID:152923340062 FALCON HEIGHT, MN 55113-6304	FIELD BOOK NO.: EDS-15	CHECKED BY: VS	SHEET NO. 1 OF 1

462.356 PROCEDURE TO EFFECT PLAN: GENERALLY.

Subdivision 1. **Recommendations for plan execution.** Upon the recommendation by the planning agency of the comprehensive municipal plan or sections thereof, the planning agency shall study and propose to the governing body reasonable and practicable means for putting the plan or section of the plan into effect. Subject to the limitations of the following sections, such means include, but are not limited to, zoning regulations, regulations for the subdivision of land, an official map, a program for coordination of the normal public improvements and services of the municipality, urban renewal and a capital improvements program.

Subd. 2. **Compliance with plan.** After a comprehensive municipal plan or section thereof has been recommended by the planning agency and a copy filed with the governing body, no publicly owned interest in real property within the municipality shall be acquired or disposed of, nor shall any capital improvement be authorized by the municipality or special district or agency thereof or any other political subdivision having jurisdiction within the municipality until after the planning agency has reviewed the proposed acquisition, disposal, or capital improvement and reported in writing to the governing body or other special district or agency or political subdivision concerned, its findings as to compliance of the proposed acquisition, disposal or improvement with the comprehensive municipal plan. Failure of the planning agency to report on the proposal within 45 days after such a reference, or such other period as may be designated by the governing body shall be deemed to have satisfied the requirements of this subdivision. The governing body may, by resolution adopted by two-thirds vote dispense with the requirements of this subdivision when in its judgment it finds that the proposed acquisition or disposal of real property or capital improvement has no relationship to the comprehensive municipal plan.

History: *1965 c 670 s 6*

CITY OF FALCON HEIGHTS
PLANNING COMMISSION RESOLUTION

March 24, 2026

No. 26-01

RESOLUTION FINDING THAT THE ACQUISITION AND CONVEYANCE OF CERTAIN PROPERTY BY THE CITY OF FALCON HEIGHTS IS/IS NOT IN COMPLIANCE WITH THE CITY'S 2040 COMPREHENSIVE PLAN

WHEREAS, the City of Falcon Heights ("City") is proposing to acquire certain property located at 1407 Larpenteur Ave W, Falcon Heights, MN 55113, consisting of two parcels, including Ramsey County Tax Identification Nos. 152923340061 and 152923340062 (the "Property") for the purpose of pollution remediation and eventual redevelopment; and

WHEREAS, the acquisition of the Property has been submitted to the Planning Commission for its review and issuance of a written report of its finding pursuant to Minn. Stat. § 462.356, subd. 2; and

WHEREAS, the Planning Commission has reviewed the proposed acquisition of the Property as it relates to the City's comprehensive plan.

NOW, THEREFORE, BE IT RESOLVED by the Planning Commission of the City of Falcon Heights that the City acquisition of the Property is/is not found to be consistent with the City's 2040 Comprehensive Plan.

ADOPTED this 24th day of March, 2026 by the Planning Commission of the City of Falcon Heights.

Moved by:

Approved by: _____
Jacob Brooks
Chair, Planning Commission

ANDERSON
BROOKS
HALLOWANGER
MIAZGA
PAYNTER
SEIFERT
TRACY

___ In Favor

___ Against

Attested by: _____
Hannah B. Myhren
Community Development Coordinator

DRAFT